Q80™ Tape Library

Installation and Operations Manual

Document No. 511013 Rev. 04

Copyright

© Copyright 2016, QUALSTAR. All rights reserved. This document and the information contained herein are the property of QUALSTAR. No part of this document may be reproduced, transmitted, transcribed, stored in a retrieval system, or translated into any language or computer language in any form or by any means, electronic, mechanical, magnetic, optical, manual, or otherwise, without the express written permission of QUALSTAR.

Trademark Notices

QUALSTAR makes no representation or guarantees with respect to the contents of this document and specifically disclaims any implied warranties of merchantability or fitness for any particular purpose. Further, QUALSTAR reserves the right to revise this publication without obligation of QUALSTAR to notify any person or organization of such revision or changes.

Q80™ is a Trademark of Qualstar Corporation

Revision History

Date	Issue	Revision	Author	Description of changes
2016-01-18	Initial release	01	Michael Smith	
2018-01-26		02	Kevin Yi	Add LTO8
2022-09-19		03	Kevin Yi	Add LTO9
2026-06-19		04	Kevin Yi	Add LTO10 Driveless Partition MFA Login

Contacting Qualstar

Sales
Qualstar Corporation
Camarillo,CA

Sales@Qualstar.com
805-583-7744
877-886-2758 (Toll Free)

Technical Support
Qualstar Corporation
Camarillo, CA

support@qualstar.com
805-416-7055

For non-urgent questions, please use the form on our website at:
http://www.qualstar.com/service-requests/

Product warranty caution

The Q80 Tape Library contains no user-serviceable components. Only an authorized service center should carry out any servicing or repairs. The warranty for the tape library shall not apply to failures of any unit when:

- Any of the tape library components is repaired or modified by anyone other than Qualstar's personnel or approved agent. **Note**: Certain components of the Q80 Tape Library, are identified in this manual as 'field replaceable'. These include the power supply, tape drives, library controller and magazines. User replacement of such complete components with corresponding parts supplied by Qualstar does not affect warranty, provided the user strictly adheres to the instructions herein.
- The tape library is physically abused, or used in a manner that is inconsistent with the operating instructions or product specification defined by Qualstar.
- The tape library fails because of accident, misuse, abuse, neglect, mishandling, misapplication, alteration, faulty installation, modification, or service by anyone other than the factory service center or its approved agent.
- The tape library is repaired by anyone, including an approved agent, in a manner that is contrary to the maintenance or installation instructions supplied by Qualstar.
- The manufacturer's serial number tag is removed.
- The tape library is damaged because of improper packaging on return.

In case of unauthorized repairs or modifications, your warranty becomes immediately void.

© Copyright QUALSTAR 2016

Contents

1 Product Overview 3
1.1 Supported Tape Drives 4
1.2 Front Panel 5
1.3 Rear Panel 6
1.4 Tape Drive Back Panels 7
1.4.1 LTO HH SAS 7
1.4.2 LTO HH FC 7
1.5 Power Supply Rear Panel LEDs 7
2 Installing the Library 8
2.1 Planning Installation 8
2.2 Location Requirements 8
2.3 SAS Configuration Requirements 9
2.4 Fibre Channel Configuration Requirements 10
2.5 Planning Module and Rack Layout 10
2.6 Supported Library Configurations 10
2.7 Host Preparation 12
2.8 Installation Precautions 13
2.9 Unpacking Base Library and Expansion Modules 13
2.10 Identifying Library Components 16
2.11 Preparing Top and Bottom Modules in a multi module system 16
2.12 Installing Modules in a Rack 18
2.13 Aligning and Connecting Modules 20
2.14 Installing Tape Drives 22
2.15 Connecting Fibre Channel Cables 22
2.16 Connecting SAS Cables 22
2.17 Powering On the Library 23
2.18 Internal IP Range Selection 24
2.19 Using the Configuration Wizard 25
2.20 Verifying the Host Connection 25
2.21 Labeling and Loading Tape Cartridges 25
2.21.1 Using the Mailslot 25
2.21.2 Bulk Loading Magazines 25
2.22 Verifying the Installation 26
2.23 Configuring Additional Features 27

© Copyright QUALSTAR 2016

3 Tape Cartridges and Magazines 27
3.1 Tape Cartridges 27
3.1.1 Using and Maintaining Tape Cartridges 28
3.1.2 Labeling Tape Cartridges 28
3.1.3 Write Protecting Tape Cartridges 30
3.1.4 Read and Write Compatibility 30
4 Operating the Library 31
4.1 Using the OCP 31
4.2 Using the RMI 31
4.3 Logging into the Library 32
4.4 Using the Library Main Screen 33
4.4.1 Top Banner Elements 33
4.4.2 Left Pane Elements 34
4.4.3 Center Pane Elements 35
4.5 Configuring the Library 35
4.5.1 Using the Initial Configuration Wizard 35
4.5.2 Saving, Restoring and Resetting the Library Configuration 35
4.5.3 Configuring the Date and Time Format 37
4.5.4 Configuring Media Barcode Compatibility Checking 39
4.5.5 Configuring the Library Network Settings 40
4.5.6 Configuring SNMP 41
4.5.7 Configuring Event Notification Parameters 42
4.5.8 Configuring Tape Drives 43
4.5.9 Enabling or Disabling Mailslots 44
4.6 Element Numbering 45
4.6.1 Configuring Library Partitions 46
4.6.2 Configuring Passwords for User Accounts 50
4.6.3 Two-Factor Authentication (2FA) 51
4.6.4 Enabling SSL or SSH 54
4.7 Maintaining the Library 55
4.7.1 System Test 55
4.7.2 Slot to Slot Test 56
4.7.3 Element to Element Test 57
4.7.4 Robotic Test 58
4.7.5 OCP Test and Calibration 58
4.7.6 Viewing Log Files 59
4.7.7 Managing System Firmware 59
4.7.8 Managing Drive Firmware 60

© Copyright QUALSTAR 2016

4.7.9 Downloading Support Tickets 61
4.7.10 Downloading Log and Trace Files 62
4.7.11 Rebooting the Library 62
4.7.12 Controlling the UID LED 62
4.7.13 Moving the Robotic to the Base Library Module 63
4.8 Operating the Library 64
4.8.1 Moving Media 64
4.8.2 Opening the Mailslot 65
4.8.3 Opening a Magazine 66
4.8.4 Cleaning a Tape Drive 66
4.8.5 Rescanning the Cartridge Inventory 67
4.8.6 Forcing a Drive to Eject a Cartridge 67
4.9 Viewing Status Information 68
4.9.1 Viewing Library and Module Status 68
4.9.2 Using Inventory Lists 70
4.9.3 Viewing Drive Status 71
4.9.4 Viewing Network Status 72
5 Upgrading and Servicing the Library 73
5.1 Tools Required 73
5.2 Identifying a Failed Component 73
5.3 Installing or Replacing a Tape Drive 73
5.3.1 Removing a Tape Drive 74
5.3.2 Removing a Drive Bay Cover 75
5.3.3 Installing a Tape Drive 76
5.3.4 Connecting the SAS Cable 76
5.3.5 Connecting the Fibre Channel Cables 77
5.3.6 Configuring the FC Interface 77
5.3.7 Verifying the Installation 77
5.4 Adding an Expansion Module 78
5.4.1 Overview 78
5.4.2 Powering Off the Library 79
5.4.3 Moving a Cover to the New Module 79
5.4.4 Installing the Module in the Rack 79
5.4.5 Aligning and Connecting the Module 80
5.4.6 Connect the Power Cords 81
5.4.7 Verifying the Installation and Configuration 81
5.5 Moving the Library 81
5.6 Replacing a Power Supply 82

5.6.1 Identifying the Failed Component ... 82
5.6.2 Preparing to Remove the Power Supply ... 83
5.6.3 Removing the Power Supplies ... 83
5.6.4 Installing the New Power Supply ... 84
5.6.5 Verifying the Power Supply Installation and Operation ... 84
5.7 Replacing a Controller Board ... 85
5.7.1 Identifying the Failed Component ... 85
5.7.2 Saving the Configuration ... 85
5.7.3 Powering Off the Library ... 85
5.7.4 Preparing to Remove the Controller Board ... 85
5.7.5 Removing the Base or Expansion Module Controller ... 86
5.7.6 Installing the Base or Expansion Module Controller ... 86
5.7.7 Verifying the base or expansion module controller installation ... 87
5.7.8 Powering On the Library ... 87
5.8 Replacing the Chassis Fan ... 87
5.8.1 Identifying the Failed Component ... 87
5.8.2 Removing the Chassis Fan Assembly ... 88
5.8.3 Installing the New Chassis Fan Assembly ... 88
5.8.4 Verifying the Chassis Fan Assembly Installation ... 89
5.9 Replacing a Drive Power Board ... 89
5.9.1 Identifying the failed component ... 89
5.9.2 Powering off the library ... 89
5.9.3 Preparing to remove the drive power board ... 90
5.9.4 Removing the chassis fan assembly and drive power boards ... 90
5.9.5 Installing the New Drive Power Board ... 91
5.9.6 Powering On the Library ... 92
5.9.7 Verifying the Drive Power Board Installation ... 92
5.10 Replacing a Magazine ... 92
5.10.1 Unlocking the Magazine ... 92
5.10.2 Removing the Tape Cartridges ... 95
5.10.3 Removing the Magazine ... 95
5.10.4 Installing the Magazine ... 96
5.10.5 Verifying the Magazine Installation and Operation ... 97
5.11 Replacing a module ... 98
5.11.1 Overview ... 98
5.11.2 Saving the Configuration ... 99
5.11.3 Unlocking the Magazine ... 99
5.11.4 Removing the Tape Cartridges ... 99
5.11.5 Powering Off the Library ... 99

© Copyright QUALSTAR 2016

5.11.6 Removing the Module Cables ... 99
5.11.7 Removing the Tape Drives ... 100
5.11.8 Removing the Module from the Rack ... 100
5.11.9 Moving Library Cover Plates ... 101
5.11.10 Installing the Module into the Rack ... 102
5.11.11 Replacing the Module Components and Cables ... 104
5.11.12 Verifying the Library Configuration ... 104
5.12 Replacing the Robotic Assembly and Spooling Mechanism ... 105
5.12.1 Powering Off the Library ... 105
5.12.2 Preparing to Remove the Robotic Assembly and Spooling Mechanism from the Base Module 105
5.12.3 Removing the Robotic Assembly and Spooling Mechanism from the Base Module ... 106
5.12.4 Installing the Robotic Assembly and Spooling Mechanism into the Base Module ... 108
5.12.5 After the Robotic Assembly and Spooling Mechanism Installation ... 110
5.12.6 Powering On the Library ... 110
5.12.7 Verifying the Installation ... 110
5.13 Replacing the Front Bezel or OCP ... 110
5.13.1 Powering Off the Library ... 110
5.13.2 Removing the Bezel ... 111
5.13.3 Installing the Bezel ... 111
5.13.4 Library Troubleshooting Powering On the Library ... 111
5.14 Replacing Magazine Access Doors ... 112
5.14.1 Removing the Magazine Access Doors ... 112
5.14.2 Installing the Magazine Access Doors ... 112
6 Library Troubleshooting ... 113
6.1 Fibre Channel Connection Problems ... 113
6.2 Detection Problems after Installing a SAS Drive ... 113
6.3 Operation Problems ... 115
6.4 Performance Problems ... 119
6.4.1 Average File Size ... 119
6.4.2 File Storage System ... 119
6.4.3 Connection from the Backup/Archive Host Server to the Disk Array ... 119
6.4.4 Backup/Archive Server ... 120
6.4.5 Backup/Archive Software and Method ... 120
6.4.6 Connection from the Archive/Backup Host Server to the Library ... 120
6.4.7 Media ... 120
6.5 Finding Event Information ... 121
6.6 Unlocking the Magazine ... 121

6.6.1 Using the OCP 121
6.6.2 Using the RMI 122
6.6.3 Using the Manual Release 123
6.7 Unloading a Stuck Tape 123
6.8 Identifying a Failed Component 123
6.9 Returning the Robotic Assembly to the Base Module 124
6.9.1 The Robotic Assembly is stopped in an Expansion Module that is near the Base Module or is Stopped Directly between Two Modules 124
6.9.2 The Robotic Assembly is stopped in an Expansion Module that is not near the Base Module or it Cannot Move Vertically 125
6.10 Running Library Tests 126
7 Acronyms and Abbreviations 127
8 Event Codes 128
9 Technical specifications 136
10 Default and restore default settings 138
11 Regulatory Information 142
11.1 Recycling and disposal 142
11.2 CE mark 142
11.3 CCL mark 143
11.4 FCC (United States) 143
11.5 Canadian verification 143

Tables

Table 1: Supported Tape Drives 4
Table 2: Location Requirements 8
Table 3: Supported SAS Speeds 9
Table 4: Supported Fibre Channel Speeds 10
Table 5: Supported Library Configurations 11
Table 6: LTO Tape Drive 27
Table 7: Ultrium Read/Write Compatibility 30
Table 8: Status Icons 31
Table 9: Front Panel LED Indicators 31
Table 10: Power Problems 115
Table 11: Failure/Attention Indications Displayed on the Front Panel 115
Table 12: Tape Movement Problems 115
Table 13: Media Problems 116
Table 14: Attention LED is Lit 117
Table 15: Inventory Problems 117
Table 16: RMI Network Connection Issues 118
Table 17: Cleaning Problems 118
Table 18: Error Events 128
Table 19: Warning Events 131
Table 20: Configuration Change Events 134
Table 21: Informational Events 1421
Table 22: Physical Specifications 123
Table 23: Environmental Specifications 123
Table 24: Electrical Specifications 123
Table 25: Regulatory Specifications 124
Table 26: Default Settings 125

Introduction

Document Purpose

This manual provides information about installing, operating, troubleshooting and servicing a Qualstar Q80 Tape Library. It is intended for system administrators and general users who need physical and functional knowledge of the Q80 Tape Library.

The main components are

Base library:	800-0040-9
Expansion module:	800-0041-7

This document uses the reference Q80 to refer to the Q80 Tape Library.

General Warnings

Document Conventions:

	WARNING	Indicates that failure to follow directions could result in bodily harm or death.
	CAUTION	Indicates that failure to follow directions could result in damage to equipment or data.
!	**IMPORTANT**	Provides clarifying information or specific instructions.
	NOTE	Provides additional information.
	TIP	Provides helpful hints and shortcuts.

© Copyright QUALSTAR 2016

General Product Warnings:

DANGER

High voltage

Risk of electric shock

- Do not remove covers (top, bottom or rear). No user-serviceable parts are inside.
- Refer servicing to qualified service personnel.

WARNING

Product Weight

Risk of personal injury

Before lifting a library:

- Observe local health and safety requirements and guidelines for manual material handling.
- Remove all tapes to reduce the weight.
- Remove all tape drives to reduce the weight.
- Obtain adequate assistance to lift and stabilize the library during installation or removal.

Risk of damage to devices

When placing a library into or removing the library from a rack:

- Extend the rack's levelling jacks to the floor.
- Ensure that the full weight of the rack rests on the levelling jacks.
- Install stabilizing feet on the rack.
- Extend only one rack component at a time.

CAUTION

Static Sensitive

Risk of damage to devices

- A discharge of static electricity damages static-sensitive devices or micro circuitry.
- Proper packaging and grounding techniques are necessary precautions to prevent damage.

© Copyright QUALSTAR 2016

NOTE

- Ventilation – Place the product in a location that does not interfere with proper ventilation.
- Heat – Place the product in a location away from heat sources.
- Power sources – Connect the product to a power source only of the type directed in the operating instructions or as marked on the product.
- Power cord protection – Place the AC line cord so that it is not possible to be walked on or pinched by items placed upon or against it.
- Object and liquid entry – Insure that objects do not fall onto and that liquids are not spilled into the product's enclosure.

WARNING

Only trained personnel should operate this equipment. Read all documentation and procedures before installation or operation. This product is intended for installation and operation in a computer rack with the front and rear doors closed and secured. Only personnel with technical and product safety training should be provided access to the library. Such personnel are referred to as users throughout this document. Do not insert any tools or any part of your body into openings of an operating system.

1 Product Overview

The Qualstar Q80 is a 6U high scalable library system. The product has a base module which features 80 cartridge storage slots and 6 half height LTO drive bay positions. The base also is the tethering point for the robotic assembly, in a multi-module library the robot is able to travel through additional Q80 expansion modules to facilitate cartridge to drive exchanges. Each additional Q80 expansion module can also house 80 cartridges and 6 half height drives. The maximum expansion capability of a Q80 library system accommodates 560 cartridges and 42 tape drives in a 7 module 42U high stack.

Both the Q80 base and expansion module have optional import/export capability consisting of 10 slots per module in a removable magazine which may be allocated from the 80 cartridge storage slot pool. The 10 slot import/export supports adding/removing cartridges from the system without disrupting normal library operations.

The Q80 base module contains the color touch screen operator interface panel and uses wizards for initial system configuration and setting up library partitions. The unit also has web based remote management, which replicates the local control panel functionality. The Q80 uses easy to understand text based messages to inform of operational and error conditions enabling efficient operations and troubleshooting.

Both base and expansion modules come equipped with redundant system power as standard, using separate input power cords. The power system is fully monitored and the user is informed of overall Q80 system health (including power good status) through a dashboard in the operator interface.

The unit has modular serviceability of drives, power supplies, controllers, fans, and robotics. The field expansion capability is easy to implement and supports incremental growth to match business needs.

© Copyright QUALSTAR 2016

1.1 Supported Tape Drives

The Q80 was developed to integrate industry-standard half-height LTO tape drives. The Q80 is compatible with LTO6, LTO7, LTO8 and LTO9 tape drives. Some firmware restrictions exist, so contact Qualstar Support to understand the upgrade capability in more detail.

Mixed drive generations and mixed interfaces are supported within a single library and within a single module.

Listed below are the tape drives that have been implemented and qualified for use in a Q80.

Table 1: Supported Tape Drives

LTO Drives
LTO-7 Half-Height
LTO-8 Half-Height, Full-Height
LTO-9 Half-Height, Full-Height
LTO-10 Full-Height

© Copyright QUALSTAR 2016

1.2 Front Panel

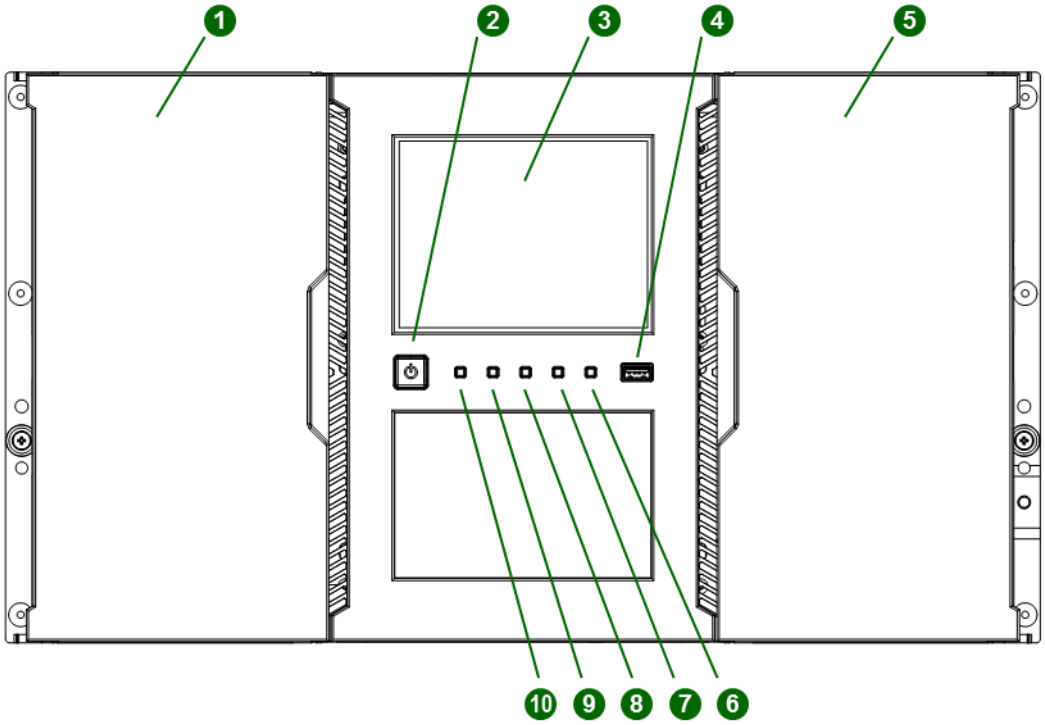

1	Magazine Access Door	
2	Power Button	(Base Library Only)
3	Operator Control Panel	(Base Library Only)
4	USB Port	(Base Library Only)
5	Mailslot/Magazine Access Door	(Base and Expansion Module)
6	Error LED, Amber	(Base Library Only)
7	Attention LED, Amber	(Base Library Only)
8	Clean LED, Amber	(Base Library Only)
9	Ready LED, Green	(Base Library Only)
10	Unit Identification LED, Blue	(Base Library Only)

© Copyright QUALSTAR 2016

1.3 Rear Panel

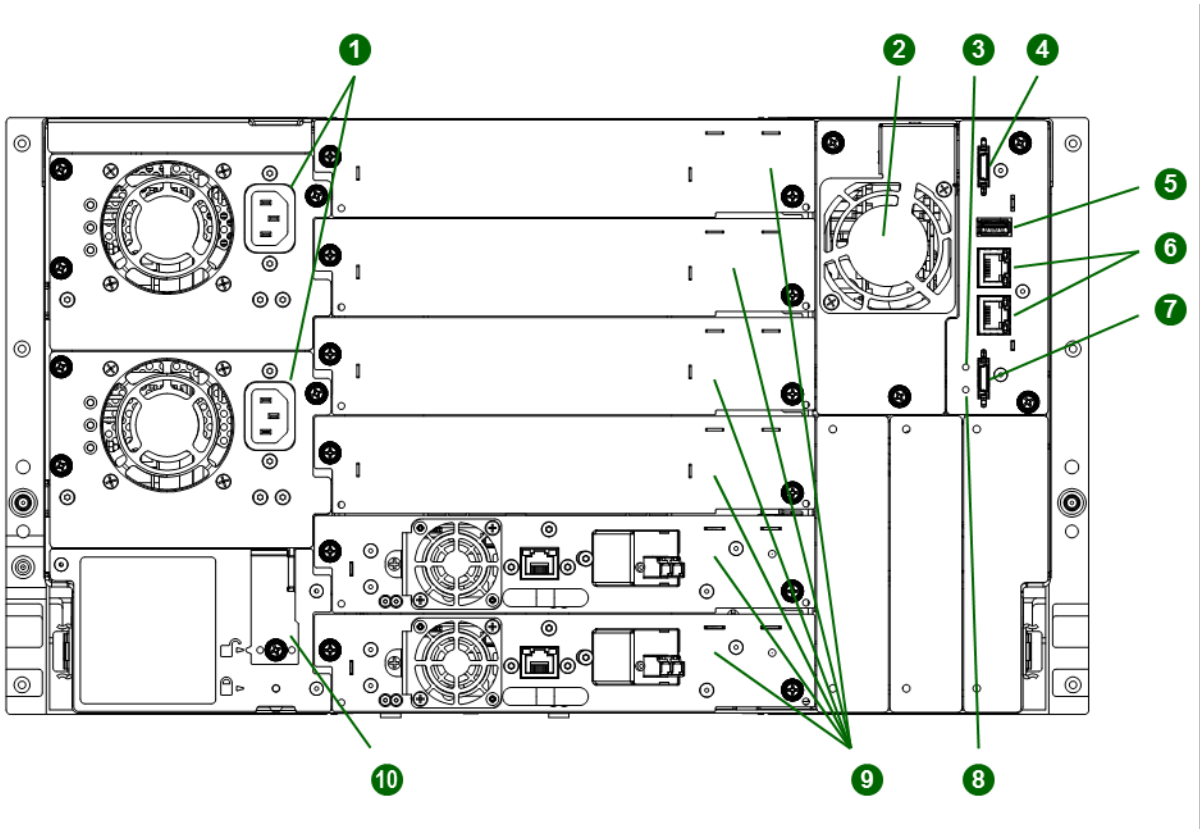

1	Power Supplies	
2	Chassis Fan	
3	Controller Health Status LED, Green	
4	Upper Expansion Module Connection Port	
5	USB Port	(Base Library Only)
6	Ethernet Ports	(Base Library Only)
7	Lower Expansion Module Connection Port	
8	Unit Identifier LED, Blue	
9	Half-Height Tape Drive Bays	
10	Module Alignment Mechanism	

© Copyright QUALSTAR 2016

1.4 Tape Drive Back Panels

1.4.1 LTO HH SAS

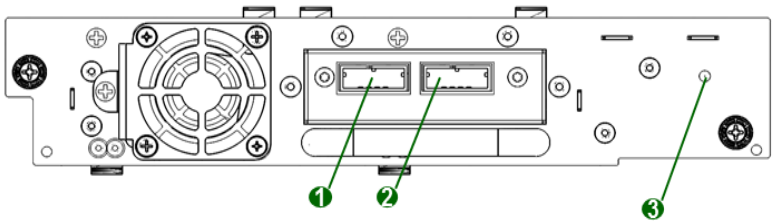

1	SAS Port A*
2	SAS Port B*
3	Tape Drive Power LED, Green
	*SFF-8088 connection shown, SFF-8644 connection available upon request (LTO9 only)

1.4.2 LTO HH FC

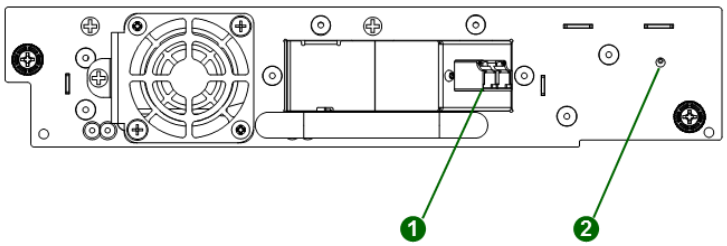

1	FC Port A
2	Tape Drive Power LED, Green

1.5 Power Supply Rear Panel LEDs

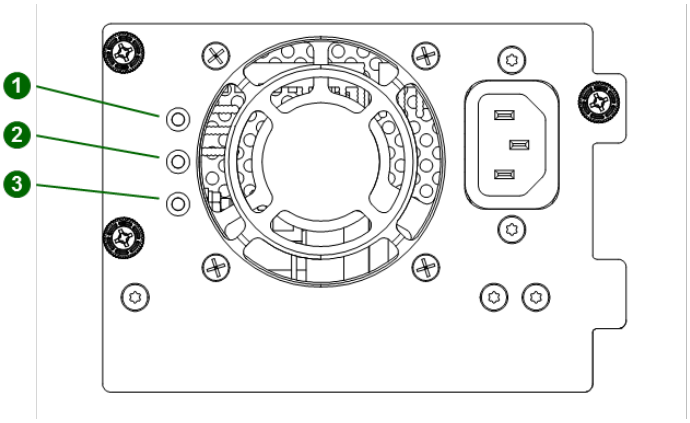

1	White	AC power connected, but Module Powered Off
2	Amber	Power Supply Fault Condition, such as fan not running, too hot or producing power outside of specification

© Copyright QUALSTAR 2016

3	Green	Module Powered On

2 Installing the Library

2.1 Planning Installation

- Choose a location for the library. See "**Location Requirements"**.
- Plan the SAS or Fibre Channel configuration and obtain the necessary cables. See **"SAS Configuration Requirements"** or "**Fibre Channel Configuration Requirements"**.
- Plan the rack layout. See "**Planning the Module and Rack Layout"**.
- Internal IP Range Selection

2.2 Location Requirements

NOTE

- The library was designed for rack installation and must be installed using the provided rack rails. Installation on a table top or other similar surface could result in library operation errors.
- Select a rack with access to the host server.
- Choose a location that meets the criteria in the table below.

Table 2: Location Requirements

Criteria	Definition
Rack Requirements	Standard 19-inch rack with an appropriate # of U's (Rack Units) of clearance for the planned module quantity
Rack Space Requirements	6U for the Base Library and 6U for each Expansion Module
Room Temperature	10-35º C (50-95º F)
Power Source	• AC Power Voltage: 100-240 VAC • Line Frequency: 50-60 Hz • Library Located near AC Outlet(s) The AC power cord is the library's main AC disconnect device and must be easily accessible at all times.
Air Quality	• Place the library in an area with minimal sources of particulate contamination • Avoid areas near frequently used doors and walkways, stacks of supplies that collect dust, printers, and smoke-filled rooms • Excessive dust and debris can damage tapes and tape drive
Humidity	20-80 percent RH non-condensing

2.3 SAS Configuration Requirements

Serial Attached SCSI (SAS) is a computer bus technology mainly used to transfer data to and from storage devices, including disk drives and tape drives. SAS is designed to transfer data at up to 6 Gbps.

SAS uses serial connections, with a direct connection between the host server and each of the storage devices. This eliminates the need to configure SCSI busses and assign SCSI IDs, as is required for parallel SCSI devices.

The host server must have a SAS host bus adapter with an external connector. The HBA uses multiple LUNs to communicate with the library. Verify that your HBA supports multiple LUNs, as most RAID controllers do not. Most SAS HBA ports have four SAS channels. A tape drive uses one channel, so each HBA port can support up to four tape drives. You can use a cable with one connector on each end, but only one channel will be used.

Supported speeds by drive generation are shown in the table below.

Table 3: Supported SAS Speeds

LTO Generation	Supported Speeds
LTO-6, LTO-7, LTO-8	1.5 Gbps, 3 Gbps, 6 Gbps
LTO-9, LTO-10	3 Gbps, 6 Gbps, 12 Gbps

CAUTION

High quality SAS cables rated at the transfer rate the SAS drives are required. Always verify that the SAS cable you are using is rated for the data transfer speed of the interface of your components. SAS cables described as "equalized" may not support 6,12 Gb/s data rates and should not be used with LTO-6 or later generation tape drives unless these cables are verified for 6,12 Gb/s data rates.

CAUTION

The library has one or more mini-SAS connectors on each SAS tape drive. Mini-SAS connectors are keyed. Do not force a SAS cable's mini-SAS connector into the tape drive as it might be keyed differently.

A SAS tape drive is identified by a unique identifier called a World Wide Name (WWN) or World Wide Identifier (WWID). The library assigns the WWID to the drive bay. When a tape drive is replaced, the WWID is re-assigned to the new tape drive.

The operating system tracks the WWID for the tape drive on each HBA channel. Each of the drive connectors on the fan-out cable is associated with an HBA channel. Once a tape drive has been plugged in, it should remain on the same channel to retain the association between the HBA channel and WWID.

© Copyright QUALSTAR 2016

2.4 Fibre Channel Configuration Requirements

The Fibre channel tape drive can be connected directly to the server with a host bus adapter (HBA) or through a storage area network (SAN).

The installation requires one Fibre Channel cable for each tape drive. The tape drives all utilize an LC-style connector. Some drives will have two FC ports, but only one cable connection is needed per drive. The cable can be connected to either drive FC port.

Supported speeds by drive generation are listed in the table below.

Table 4: Supported Fibre Channel Speeds

LTO Generation	Supported Speeds
LTO6, LTO7, LTO8, LTO9	2 Gbps, 4 Gbps, 8 Gbps
LTO10	8 Gbps, 16 Gbps, 32 Gbps

NOTE

- Use an appropriate HBA for your tape drive due to performance requirements.
- A lower Gbps HBA might result in performance degradation when moving highly compressible data to a higher Gb tape drive.
- In a SAN installation, all switches between the host and the library must be of the appropriate type.
- A lower Gb switch in the path may result in performance degradation. Configure zoning so only the backup servers may access the library.

2.5 Planning Module and Rack Layout

If possible, install the Base Library in the middle of the rack to provide space for the permitted 3 Expansion Modules above and 3 Expansion Modules below. See the **Supported Library Configurations** below for additional details.

2.6 Supported Library Configurations

All Q80 Library systems start with a Base Library Module. Up to 6 additional expansion modules can be added as needed to the base to support customer requirements. The Q80 library architecture has been designed to support a maximum of 3 expansion modules above and 3 expansion modules below the base module.

Table 1 shows the valid configurations for libraries ranging from one to a maximum of seven total modules.

The Base Library is depicted by the following image with the Operator Control Panel shown in yellow:

Each Expansion Module is represented by the following image with a large clear viewing window in the center.

Table 5: Supported Library Configurations

Module Quantity	Supported Library Configurations
1 Module Library Base Library	
2 Module Library Base Library 1 Expansion Module	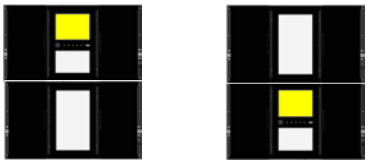
3 Module Library Base Library 2 Expansion Modules	
4 Module Library Base Library 3 Expansion Modules	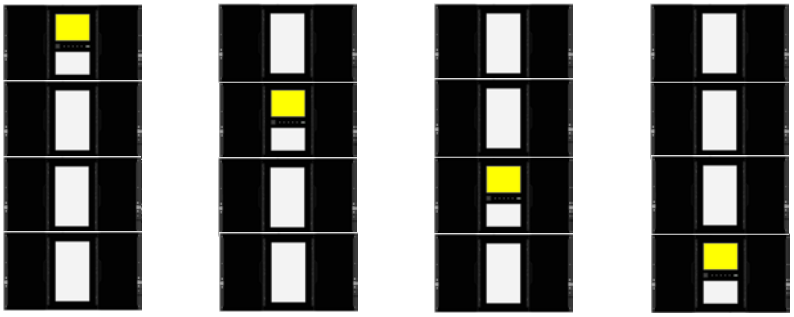
5 Module Library Base Library 4 Expansion Modules	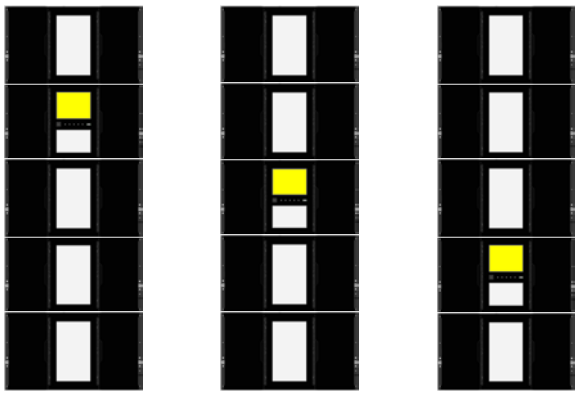

© Copyright QUALSTAR 2016

Module Quantity	Supported Library Configurations
6 Module Library Base Library 5 Expansion Modules	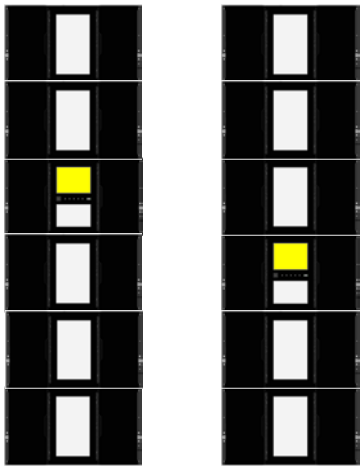
7 Module Library Base Library 6 Expansion Modules	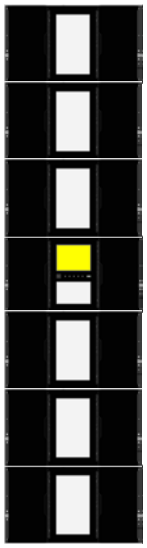

2.7 Host Preparation

CAUTION

Static Sensitive

Risk of damage to devices

- A discharge of static electricity damages static-sensitive devices or micro circuitry.
- Proper packaging and grounding techniques are necessary precautions to prevent damage.

Follow these general guidelines:

- Check with a system administrator before powering off the host computer.
- For a SAS library, confirm availability or install a SAS HBA that supports multiple LUNs.

- For a direct-attach Fibre Channel library, confirm availability of install an FC HBA.
- For connection of a Fibre Channel library through a compatible switch, verify that sufficient ports are available.

2.8 Installation Precautions

WARNING

Product Weight

Each Q80 module weighs more than 40 kg (88 lbs) without drives or tapes and more than 70 kg (144 lbs) with 6 tape drives and 80 tapes.

Risk of personal injury

Before moving or lifting a library:

- Observe local health and safety requirements and guidelines for manual material handling.
- Remove all tapes to reduce the weight and to prevent cartridges from falling into the robotics path and damaging the library.
- Remove all tape drives to reduce the weight.
- Obtain adequate assistance to lift and stabilize the library during installation or removal.

Risk of damage to devices

When placing a library into or removing the library from a rack:

- Extend the rack's levelling jacks to the floor.
- Ensure that the full weight of the rack rests on the levelling jacks.
- Install stabilizing feet on the rack.
- Extend only one rack component at a time.

CAUTION

- Do not expose the library to moisture.
- Do not place a module on either the ends or sides as this may cause damage.

2.9 Unpacking Base Library and Expansion Modules

Before unpacking any modules, clear a work surface near the targeted rack for installation.

CAUTION

If the temperature in the room where the library will operate varies by 15° C (30° F) from where the module was stored, allow it to acclimate for at least 12 hours prior to unpacking.

Unpacking a Q80 Base Library or Expansion Module:

1. Before opening and removing a module from the box, inspect the container for shipping damage.
2. If you notice any damage, report it to the shipping company immediately.

© Copyright QUALSTAR 2016

3. Cut and remove the bands on the outside of the container.

4. Lift up the outer cardboard box – it is not secured to the pallet.

5. Remove the inner cardboard sleeve surrounding the module.
6. Remove the rack rails.

© Copyright QUALSTAR 2016

7. Remove the accessory kit box.
8. Remove the foam pieces from the top of the module.

Remove foam from top

9. With assistance, lift the module out of the bottom foam nest, remove the wrapping from the module and then place the module on the work surface.

CAUTION Do not place a module on either the ends or sides as this may cause damage.

10. Save the packaging materials for future use.

© Copyright QUALSTAR 2016

2.10 Identifying Library Components

If you have unpacked a Base Library, confirm that you have received the following components:

1. Base Library
2. Two Rack Rails
3. Accessory Kit
   a. Two packets of rack mount hardware
   b. Two North American Power Cords
   c. Two European Power Cords

If you have unpacked an Expansion Module, confirm that you have received the following components:

1. Expansion Module
2. Two Rack Rails
3. Accessory Kit
   a. Two packets of rack mount hardware
   b. Two North American Power Cords
   c. Two European Power Cords
   d. Expansion Interconnect Cable

For SAS libraries, you must provide SAS cabling with the correct configuration for your HBA. For Fibre Channel libraries, you must provide one Fibre Channel cable for each tape drive.

2.11 Preparing Top and Bottom Modules in a multi module system

Skip this step if you are installing a base library without expansion modules.

The base module has removable top and bottom covers to enable expansion. You will need to transfer one or both covers (depending if you are expanding the base above, below or both) from the base module to expansion modules. The covers are identical and the procedure to change them is the same for both top and bottom covers.

- If you are installing expansion modules below the base library, move the bottom cover from the base library to the expansion module that will be installed at the bottom of the library.
- If you are installing expansion modules above the base library, move the top cover from the base library to the expansion module that will be installed at the top of the library.

© Copyright QUALSTAR 2016

To move a library cover plate from the base module to an extension module:

1. Remove the library cover plate from the base module.
   a. Place the base module on a work table. If you are removing the bottom cover, gently turn the base module over so you can access the bottom of the module.
   b. Insert a small flathead screwdriver or Torx screwdriver into the hole to retract the spring lock, slide the cover until it reaches the tool, remove the tool and continue sliding the cover to the front of the module until all the tabs are released.

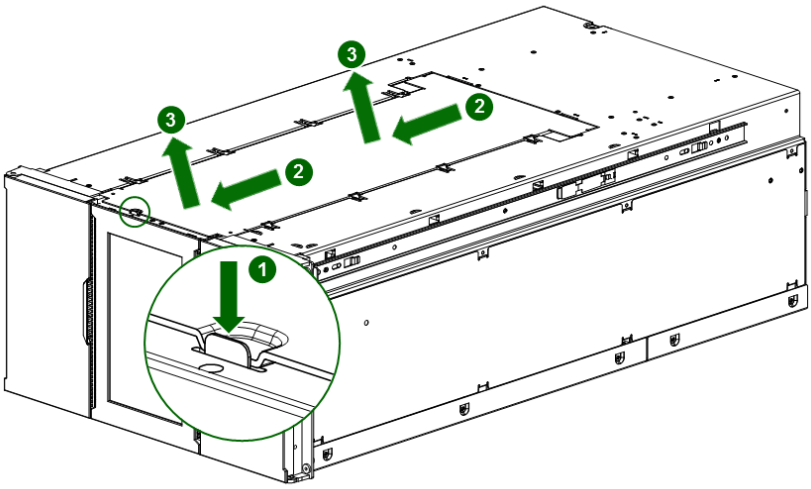

   c. Remove the cover from the module.
   d. If the base module is upside down, gently return it to its normal position.
2. Install the cover on the expansion module.
   a. Place the expansion module on the work table. If the module will be the bottom module in the library, gently turn the module over so you can access the bottom of the module.
   b. Align all tabs on the cover with the slots on the module, gently push it down, and then slide the cover towards the back of the module until the spring lock engages.

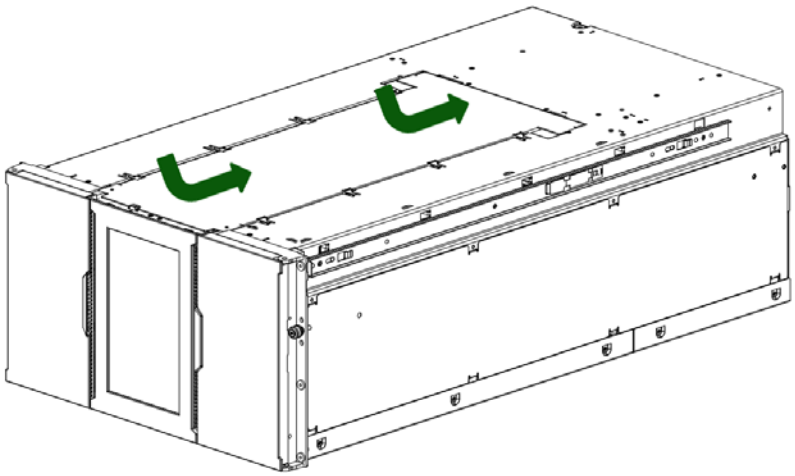

© Copyright QUALSTAR 2016

2.12 Installing Modules in a Rack

Q80 modules are easy to install in racks compliant to EIA 310A Standard, at least 1 meter deep. You need a #2 Phillips screwdriver for this process. These type of racks have square mounting holes for the rack equipment mounting, For racks which have round mounting holes Qualstar offers an optional round hole mounting kit P/N 376 142 483-01. The round hole kit must be used in installations which are using racks with round holes to insure proper unit alignment, one kit per module is required.

To locate the rail locations when installing multiple modules:

1. Locate the bottom of the lowest full U where the lowest module will be installed.
2. Continue noting the locations for any additional modules 6U higher.

To install the rails into the rack, starting from the lowest rack location:

1. From the front of the rack, insert the rack rails into the back and then front vertical supports.
   a. Position a rail according to the left-right front-rear orientation information stamped on the rail.
   b. Rotate the front of the rail up while inserting the rear rail hanger into the rear vertical support, and then lower the front of the rail until it is nearly level.
   c. Extend the front of the rail until the hangers come through the holes in the vertical support and the retention spring snaps into place.
   d. Repeat sub steps a, b, and c with the other rail.

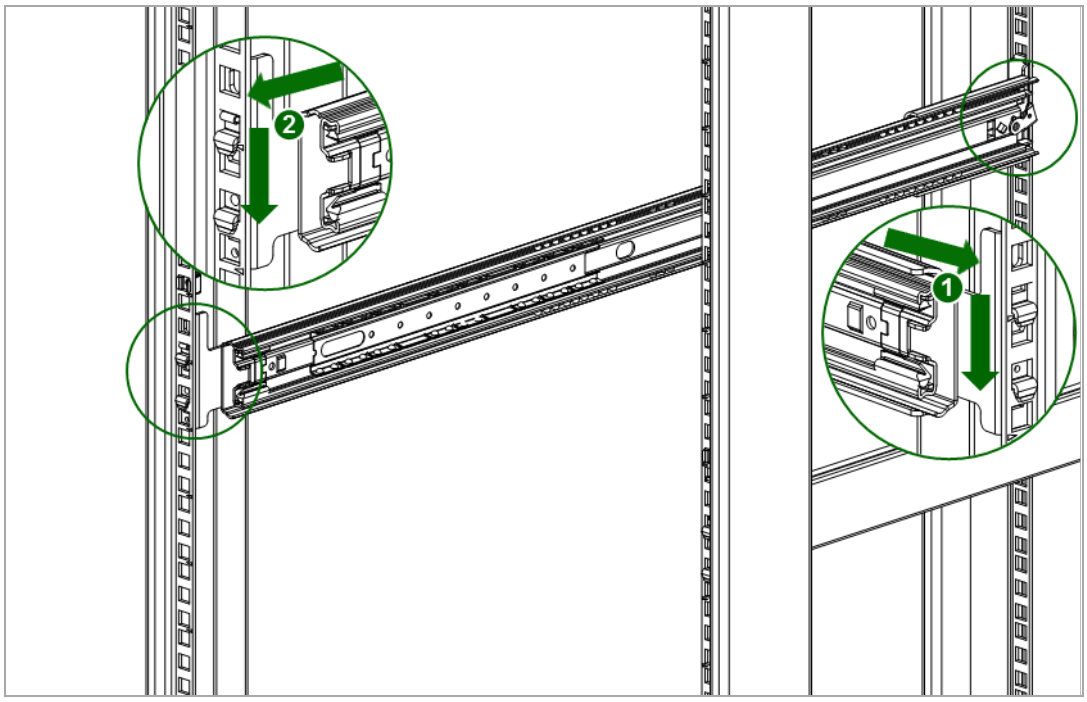

2. On the front of both rails in a square-hole rock, install a clip nut above the mounting bracket as shown.

The library has a three-part rail system:

- Outer rail is installed in the rack.
- Middle rail connects to the inner and outer rails so the module can be slid out of the rack.
- Inner rail is attached to the module.

To install the modules in the rack, starting with the bottom module:

1. Extend the middle rails until they lock into place. Move the sliding assembly to the front of the middle rails.

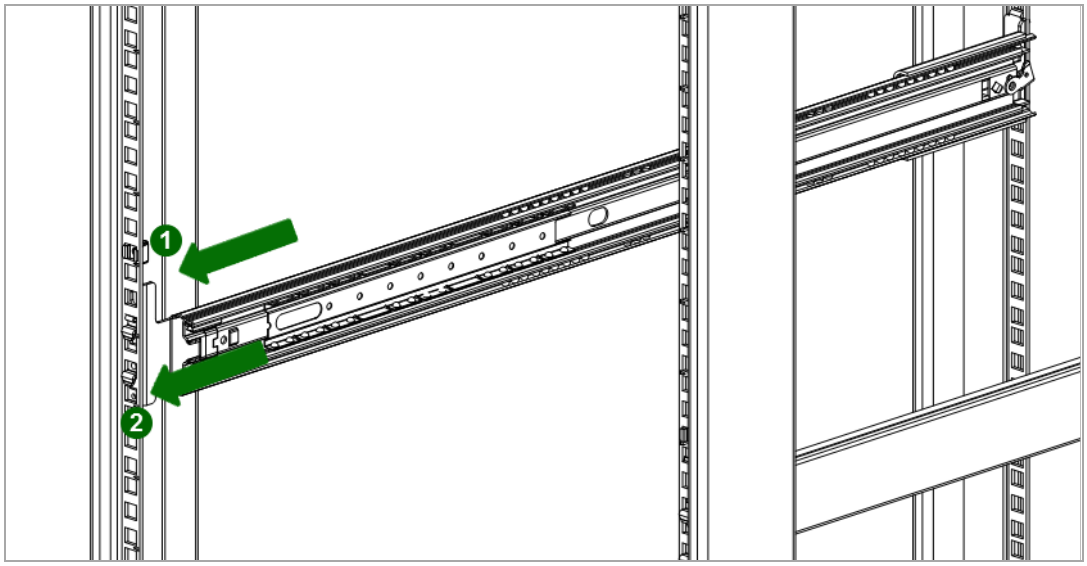

2. Slide the inner rails into the middle rails. Slide the module into the rack

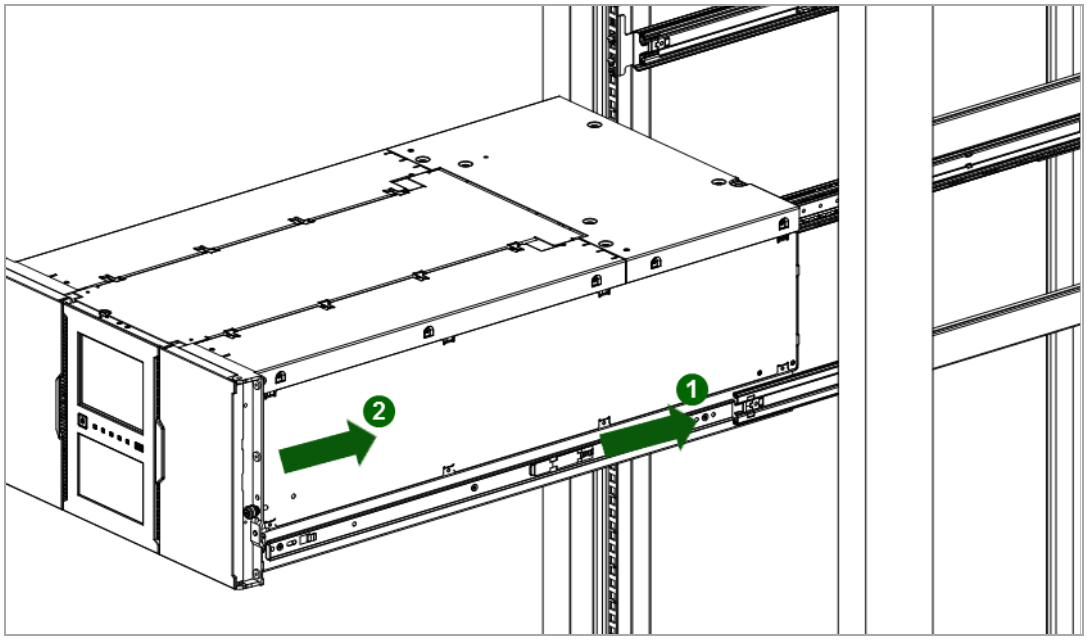

3. If you are installing multiple modules, verify that this module has been installed directly above or below its adjacent module and is contained within the correct 6U volume. The gap between modules must be less than 4 mm (just over $^{5}/_{32}$ of an inch)

© Copyright QUALSTAR 2016

4. Use your fingers to tighten the captive thumbscrew on each side of the module.

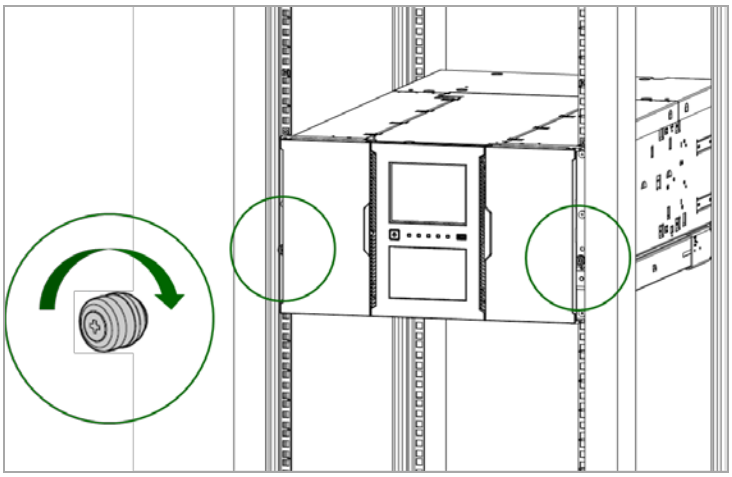

5. Repeat steps 2 through 4 to install the rest of the modules into the rack.

2.13 Aligning and Connecting Modules

Skip this step if the library does not have any expansion modules.

Aligning the modules ensures that the robot from the base module can move freely between the modules. The Q80 library will not operate unless the alignment mechanism on the rear of each module is in the locked position (with the exception of the bottom most module).

1. From the front of the library, loosen the thumbscrews on each of the modules two full turns.
2. From the back of the library, starting with the bottom pair of modules, align each module with the module below. Repeat for each pair of modules.
   a. Loosen the thumbscrew on the module alignment mechanism.
   b. Lower the alignment mechanism. If you encounter resistance, adjust the position of the upper module so the pin in the alignment mechanism moves into the hole in the lower module. When the alignment mechanism is in the locked position, tighten the thumbscrew.

© Copyright QUALSTAR 2016

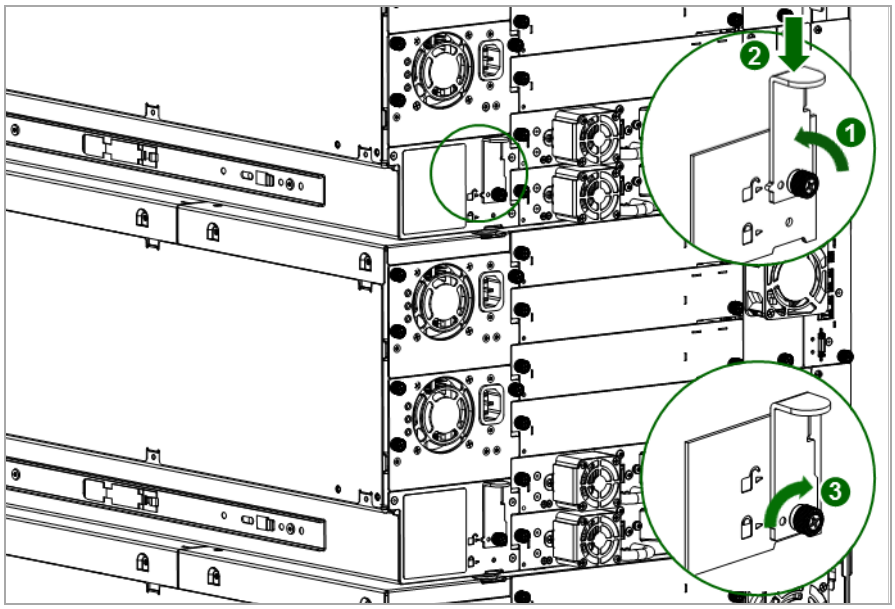

3. Verify that the lowest module in the library has its alignment mechanism secured in the unlocked position with the thumbscrew.
4. From the front of the library, use your fingers to tighten the thumbscrews on each of the modules to secure the modules to the rack.
5. From the back of the library connect the lower module of each pair to its adjacent module using the expansion interconnect cable as shown.

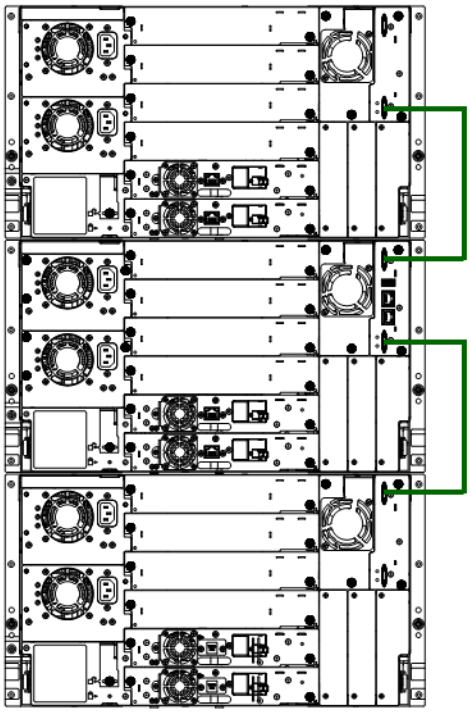

2.14 Installing Tape Drives

1. Locate an appropriate vacant drive bay on the back of the library.
2. To assist in aligning the drive, only remove the drive bay covers for one drive at a time. Remove the face plate covering the drive bay by removing the screws holding it in place. Remove one drive bay cover to install a half-height tape drive.
3. Holding the tape drive by the handle and supporting it from the bottom, slide the tape drive along the alignment rails into the drive bay until it is flush with the back of the library.
4. Tighten the blue captive screws with your fingers to secure the tape drive to the chassis. If the thumbscrews cannot be tightened, verify that the tape drive is aligned properly.

CAUTION All drive bays without tape drives installed must have drive bay covers installed.

2.15 Connecting Fibre Channel Cables

1. Remove the FC port caps if necessary. Attach one end of the FC cable to port A on the tape drive.

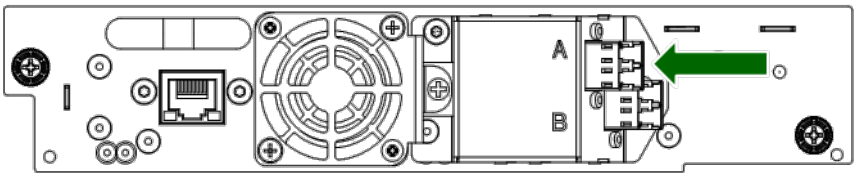

2. Attach the other end of the FC cable to a switch or HBA.

2.16 Connecting SAS Cables

1. Attach the HBA end of the SAS cable into the connector on the HBA. If you are using a SAS fanout cable, the end of the cable with only one connector should be plugged into the HBA.
2. Connect the drive end of the cable.
   - If you are using a cable with a single connector on each end, attach the other end into the connector on the tape drive.
   - If you are using a SAS fanout cable, attach one mini-SAS connector into the connector on each tape drive. The unused ends of the SAS fanout cable are single channel and not suitable for use with disk arrays. Use the other ends to connect tape drives, or coil and secure them to the rack to minimize stress on the connectors.

© Copyright QUALSTAR 2016

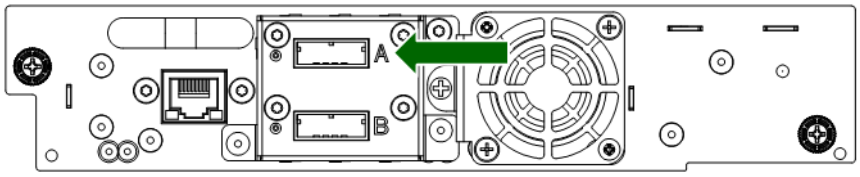

NOTE SAS signal rates require clean connections between the HBA and tape drive. Do not use adapters or converters between the HBA and the tape drive. For reliable operation, use a maximum SAS cable length of six meters.

2.17 Powering On the Library

1. Plug the appropriate power input cables into the power connectors (1) on the rear of each module and into the facility power outlets.

NOTE The library has dual redundant power supplies. To increase redundancy, plug each power cord into a different AC power circuit.

2. To use the RMI, connect an Ethernet cable from the bottom Ethernet ports (2) on the library module controller to your network.
3. Power on the library by pressing the power button on the base module front panel located just below the OCP; the green light will illuminate. When the library is powered on, it inventories the tape cartridges in the magazines, checks the firmware version on all modules, configures the tape drives, confirms the presence of the existing modules, and searches for any new modules.

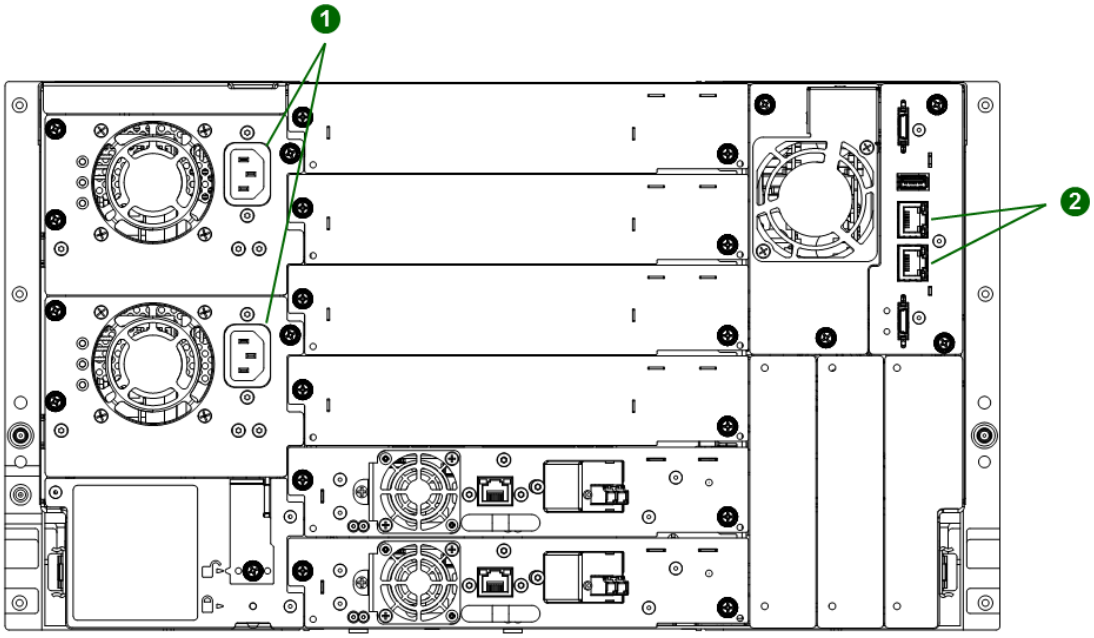

1 Power Connectors
2 Ethernet Ports (Base Library Only)

2.18 Internal IP Range Selection

For internal communication between modules the tape library uses an Ethernet connection with an internal IP address range. To prevent any conflict between the internal IP address range and the external IP addresses it is required to select the internal IP range before the tape library gets connected to the external Ethernet port.

Therefore, a file which contains the internal IP range is stored onto the base library backplane: **/opt/storage/mfg/stack/network.range and LCM /opt/storage/configuration/network.range**

The Values must be in the following format: **RANGE=192.0.2/24**

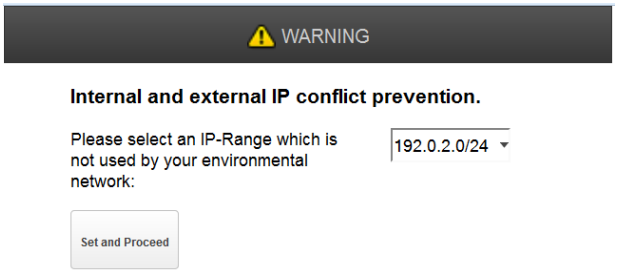

Please note: the last section of the IP address is not set because it will be set internally.

The file will be created through the OCP IP Range selection page when the Stack starts for the very first time or if the unit was reset to Manufacturing Defaults / Reset via OCP/RMI.

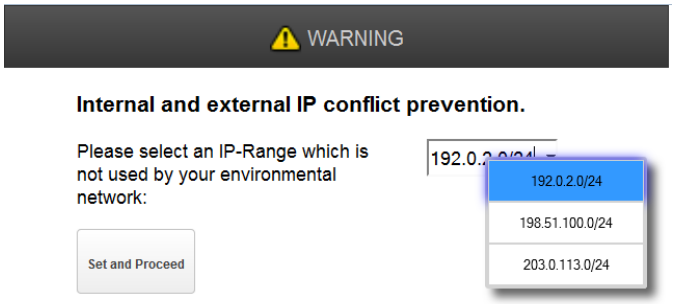

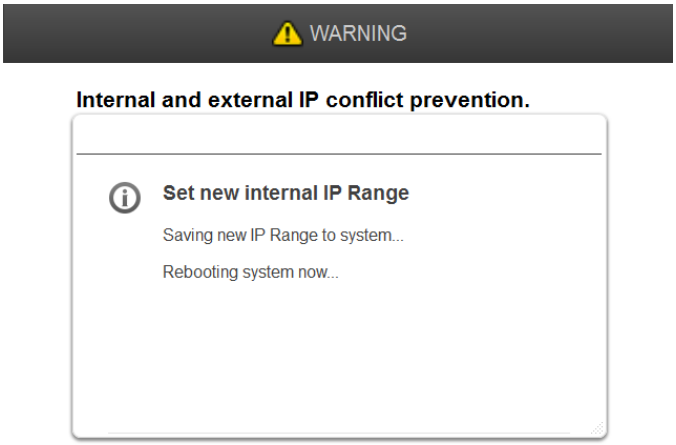

2.19 Using the Configuration Wizard

Start the Initial Configuration Wizard from the OCP. The wizard will guide you through configuring the time zone, date and time, and network settings, setting the administrator password, and then start an initial system test. You can skip items and stop the wizard at any time. Once you have configured the network settings and set the administrator password, you can initiate the wizard from the RMI to complete the remaining configurations.

2.20 Verifying the Host Connection

To verify the connections between the host computer and the library:

1. Install the application software and/or drivers that are compatible with the library. Backup software packages might require additional software or licensing to communicate with the robotics.
2. Verify the connection between the library and the host using the host server's operating system utilities.

2.21 Labeling and Loading Tape Cartridges

The library will power on without cartridges, but needs cartridges before performing data read and write operations, or any tests or operations that transfer data to cartridges.

Barcode labels are recommended in production environments to reduce inventory time in the library and ease cartridge handling processes outside the library.

2.21.1 Using the Mailslot

If the mailslot is enabled, you can use it to load cartridges into the library. On the Home screen, tap **Open Mailslot**, open the front right magazine access door, and then pull the mailslot out. The Q80 may also be bulk loaded by accessing the magazine.

2.21.2 Bulk Loading Magazines

1. Extend one of the magazines from the library.
   a. From the OCP or RMI, select the module and then select Open Magazine.

b. Open the magazine access door.

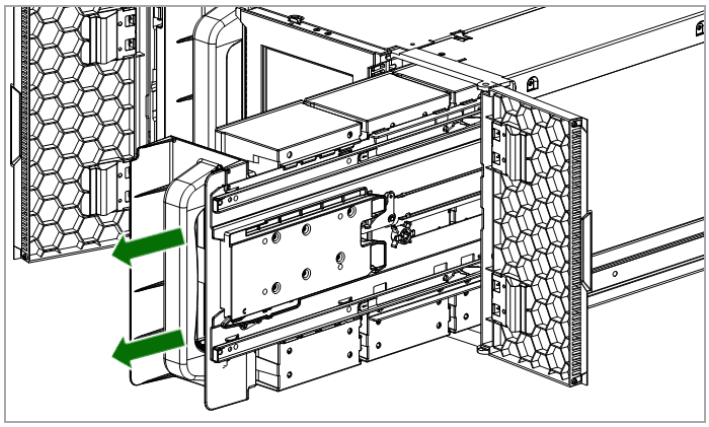

2. Load the tape cartridges into the magazine starting with the back most vertical 10 slot bin of the magazine. Move the magazine slightly into the library as each bin is filled.
3. Once the magazine is filled push the magazine handle slowly until the magazine release latch snaps into place. The magazine locks into place.

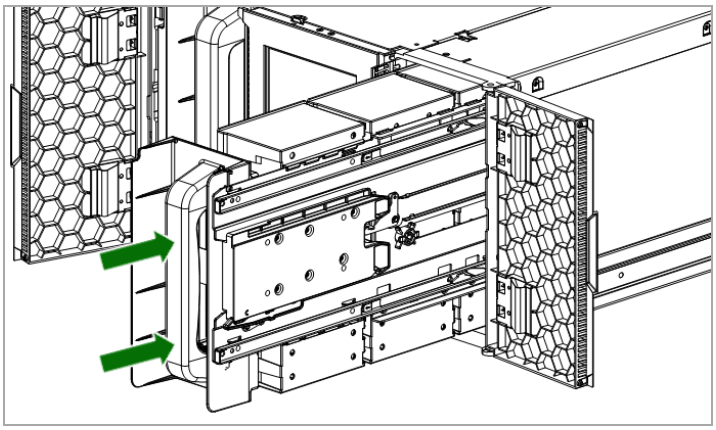

4. Repeat steps 1 through 3 for each of the other magazines and other modules.

2.22 Verifying the Installation

Verify that the library has the current firmware revision. The library firmware revision is displayed in the top left corner of the OCP and RMI screen.

If necessary, update the library firmware from the OCP or RMI **Maintenance > Software Upgrades > System Firmware** screen.

After configuring the library, you can save the configuration settings to a USB flash drive from the OCP or to a file on your computer from the RMI **Configuration > Save/Restore** screen. Having a backup of the library configuration is helpful when recovering from a configuration error or if the library needs service.

To update library firmware from the RMI, click Choose File and select the firmware file from the local computer.

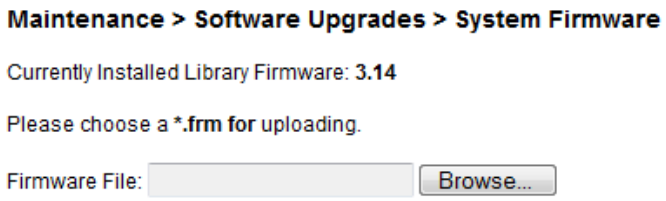

To update the library firmware from the OCP:

1. Copy the firmware file to a USB flash drive.
2. Insert the USB thumb drive into the USB port on the front of the library. The library detects the USB drive.
3. Select the firmware file.
4. Click Start Upgrade.

When you update the library firmware, the library will update the firmware of the expansion modules to a compatible version.

2.23 Configuring Additional Features

The library has many features to customize it for your organization.

- Enabling the mailslot. See "**Enabling or Disabling Mailslots**".
- Naming the library via the partitioning wizard. See "**Configuring Library Partitions**".
- Partitioning the library. See "**Configuring Library Partitions**".
- Enabling and configuring SNMP network management. See "**Configuring SNMP**".
- Setting up email event notification. See "**Configuring Event Notification Parameters**"

3 Tape Cartridges and Magazines

3.1 Tape Cartridges

Table 6: LTO Tape Drive

Tape drive generation	Tape cartridge type
LTO-7	▪ Ultrium LTO7, 6.0 TB data cartridge ▪ Universal cleaning cartridge
LTO-8	▪ Ultrium LTO8, 12 TB data cartridge ▪ Universal cleaning cartridge
LTO-9	▪ Ultrium LTO9, 18 TB data cartridge ▪ Universal cleaning cartridge
LTO-10	▪ Ultrium LTO10, 30 or 40 TB data cartridge ▪ Universal cleaning cartridge

NOTE LTO-3 and later tape drives support both rewriteable and WORM data cartridges. Write-Once, Read-Many (WORM) data cartridges provide an enhanced level of data security against accidental or malicious alteration of data on the tape cartridge. The WORM data cartridge can be appended to maximize the full capacity of the tape cartridge, but you will be unable to erase or overwrite data on the cartridge.

3.1.1 Using and Maintaining Tape Cartridges

CAUTION Do not magnetically degauss LTO data cartridges! These data cartridges are pre-recorded with a magnetic servo signal. This signal is required to use the cartridge with the LTO tape drive. Keep magnetically charged objects away from the cartridge.

To ensure the longest possible life for your data cartridges, follow these guidelines:

- Use only the data cartridges designated for your device.
- Clean the tape drive when the Clean drive LED is illuminated.

CAUTION Use only Ultrium Universal cleaning cartridges.

- Do not drop a cartridge. Excessive shock can damage the internal contents of the cartridge or the cartridge case itself, making the cartridge unusable.
- Do not expose data cartridges to direct sunlight or sources of heat, including portable heaters and heating ducts.
- The operating temperature range for data cartridges is 10 to 35º C. The storage temperature range is -40 to +60º C in a dust-free environment in which relative humidity is always between 20 percent and 80 percent (non-condensing).
- If the data cartridge has been exposed to temperatures outside the specified ranges, stabilize the cartridge at room temperature for the same length of time it was exposed to extreme temperatures or 24 hours, whichever is less.
- Do not place data cartridges near sources of electromagnetic energy or strong magnetic fields such as computer monitors, electric motors, speakers, or X-ray equipment. Exposure to electromagnetic energy or magnetic fields can destroy data and the embedded servo code written on the media by the cartridge manufacturer, which can render the cartridge unusable.
- Place identification labels only in the designated area on the cartridge.

3.1.2 Labeling Tape Cartridges

The device contains a bar code reader that reads the tape labels and stores the inventory data in memory. The device then provides the inventory information to the host application, OCP, and RMI. Having a bar code label on each tape cartridge enables the bar code reader to identify the cartridge quickly, thereby speeding up inventory time. Make it standard practice to use bar code labels on your tape cartridges.

© Copyright QUALSTAR 2016

! **IMPORTANT** Note: the tape library does not support unlabelled media. Make sure every cartridge has a barcode label in place.

A proper bar code label includes the media ID in the last two characters of the bar code. The library will not load an incompatible cartridge, based on the barcode media ID, into a tape drive. For example, the library will not load a cartridge labeled as LTO-3 into an LTO-6 tape drive. This saves the time needed to load the cartridge and have the tape drive reject it.

Though not recommended, disabling bar code checking in the **Configuration > Ignore Barcode Media ID** screen will allow all media moves regardless of the bar code media ID.

Your host software may need to keep track of the following information via the associated bar code:

- Date of format or initialization
- Tape's media pool
- Data residing on the tape
- Age of the backup
- Errors encountered while using the tape (to determine if the tape is faulty)

! **IMPORTANT** Misusing and misunderstanding bar code technology can result in backup and restore failures. Self-printed labels are not recommended as they are often a source of barcode reading issues.

LTO tape cartridges have a recessed area located on the face of the cartridge next to the write-protect switch. Use this area for attaching the adhesive-backed bar code label. Only apply labels as shown:

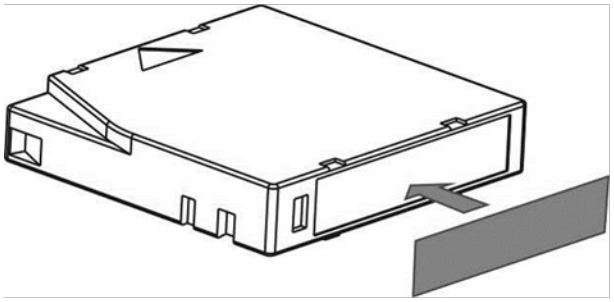

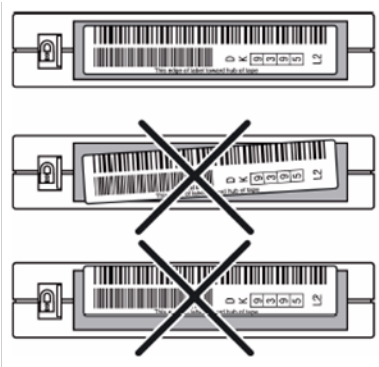

! **IMPORTANT** The bar code label should only be applied as shown, with the alphanumeric portion facing the hub side of the tape cartridge. Never apply multiple labels onto a cartridge. Cleaning tape labels must start with CLN

3.1.3 Write Protecting Tape Cartridges

All rewriteable data cartridges have a write-protect switch to prevent accidental erasure or overwriting of data.

- Slide the switch to the left to allow the device to write data to the cartridge.
- Slide the switch to the right to write-protect the cartridge. An indicator, such as a red mark or small padlock, is visible showing that the cartridge is write-protected.

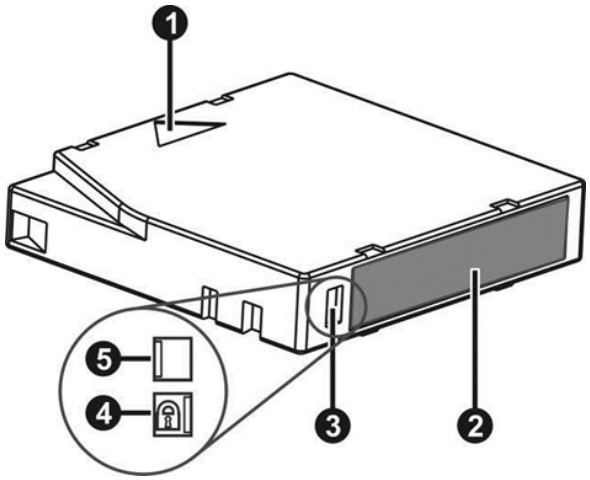

1	Insertion Arrow
2	Barcode Label
3	Write-Protect Switch
4	Write-Protected
5	Write-Enabled

3.1.4 Read and Write Compatibility

Table 7: Ultrium Read/Write Compatibility

	LTO-6 Drive	**LTO-7 Drive**	**LTO-8 Drive**	**LTO-9 Drive**	**LTO-10 Drive**
LTO-5 Media	Read/Write	Read Only	Incompatible	Incompatible	Incompatible
LTO-6 Media	Read/Write	Read/Write	Incompatible	Incompatible	Incompatible
LTO-7 Media	Incompatible	Read/Write	Read/Write	Incompatible	Incompatible
LTO-8 Media	Incompatible	Incompatible	Read/Write	Read/Write	Incompatible
LTO-9 Media	Incompatible	Incompatible	Incompatible	Read/Write	Incompatible
LTO-10 Media	Incompatible	Incompatible	Incompatible	Incompatible	Read/Write

© Copyright QUALSTAR 2016

4 Operating the Library

Beyond control by the application the library provides two main user interfaces:

- Operator control panel (OCP) — With the OCP, you can monitor, configure, and control the library from the front panel located on the base module.
- Remote management interface (RMI) — With the RMI, you can monitor, configure, and control the library remotely from a web browser. The RMI hosts a dedicated, protected Internet site that displays a graphical representation of the library.

The OCP and RMI are similar in design and functionality.

Table 8: Status Icons

	The green Status OK icon indicates that the library is fully operational and that no user interaction is required
	The blue exclamation point Status Warning icon indicates that user attention is necessary, but that the device can still perform most operations.
	The red X Status Error icon indicates that user intervention is required and that the device is not capable of performing some operations.

4.1 Using the OCP

The OCP has a power button, an LCD touch screen, and five indicator LEDs. With the OCP you can monitor, configure, and operate most library functions from the local library front panel. To navigate the OCP, tap on the LCD touch screen.

Table 9: Front Panel LED Indicators

Module ID	Blue when activated. The unit identification (UID) LEDs are controlled by the user through the OCP and **RMI Maintenance > UID LED Control** screen. The UIDs on the OCP and back panel UID are activated and deactivated together. The UIDs are helpful for locating specific library modules in a data center.
Ready	Green, steady when power is on, blinking with tape drive or library robotic activity
Clean	Amber when a tape drive cleaning operation is recommended.
Attention	Amber if the library has detected a condition for which user attention is necessary, but that the library can still perform most operations.
Error	Amber if an unrecoverable tape drive or library error occurs. A corresponding error message is displayed on the LCD screen. User intervention is required; the library is not capable of performing some operations.

4.2 Using the RMI

With the RMI, you can monitor, configure, and operate most library functions from a web browser.

When possible, it is recommended that the web based RMI be used as the primary library interface to initially configure the library because the web interface provides access to additional features, includes online help, and is easier to use. Usage of the RMI is required to configure the Q80 libraries advanced

© Copyright QUALSTAR 2016

features, such as SNMP, IPv6, encryption, and multiple library partitions but is not required for general operations.
Before using the RMI, you must configure the library network settings and set the administrator password with the OCP located on the base module. This setup can be done with the Initial Configuration Wizard. See "**Using the Initial Configuration Wizard**". Once an IP address is configured for the library the RMI may be used to complete the unit set up.
To access the RMI, open the latest version of a supported HTML browser and enter the IP address of the library in the browser's address bar. Supported browsers include Internet Explorer, Firefox, Chrome and Safari.

TIP Check the online help in the RMI for additional information. To access RMI help, click the **?** icon on the right side of the RMI top banner.

4.3 Logging into the Library

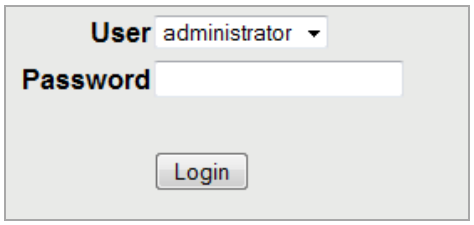

To login to the library:

1. OCP: If the OCP screen saver is on, tap the screen.

   RMI: Open a supported web browser and enter the IP address of the library in the browser's address bar.
2. Select the **User**.
3. If required, enter the **Password**.
4. Click **Login**.

The user levels are:

- User – No password is required (leave the **Password** blank unless the user password has been set).

  The user account provides access to status information only, configuration is not possible.
- Administrator – The administrator password is required to login as the administrator. The same administrator password is used for the RMI and OCP. There is no default administrator password; the administrator password must be set with the OCP before administrator functions can be used with the RMI.

  The administrator user has access to all functionality except for the log configuration and other Service features.
- Service – **Access to this user is by Service personnel only**. The service password is set at the factory. The same service password is used for the RMI and OCP. Both the administrator and service passwords are required for a service person to enter the service area.

TIP By default, the administrator password is unset; all of the digits are null. You must set the administrator password from the OCP to protect the administrator functions on the OCP and access the administrator functions on the RMI.

4.4 Using the Library Main Screen

The library main screen is organized into the following regions:

- Top Banner – Contains the home button and displays the overall status and information about the library and user
- Left Pane – Displays the library identity and module status
- Center Pane – Provides access to operate and configure the library and to view additional status information
- Right Pane – (RMI only) Displays a log of recent events

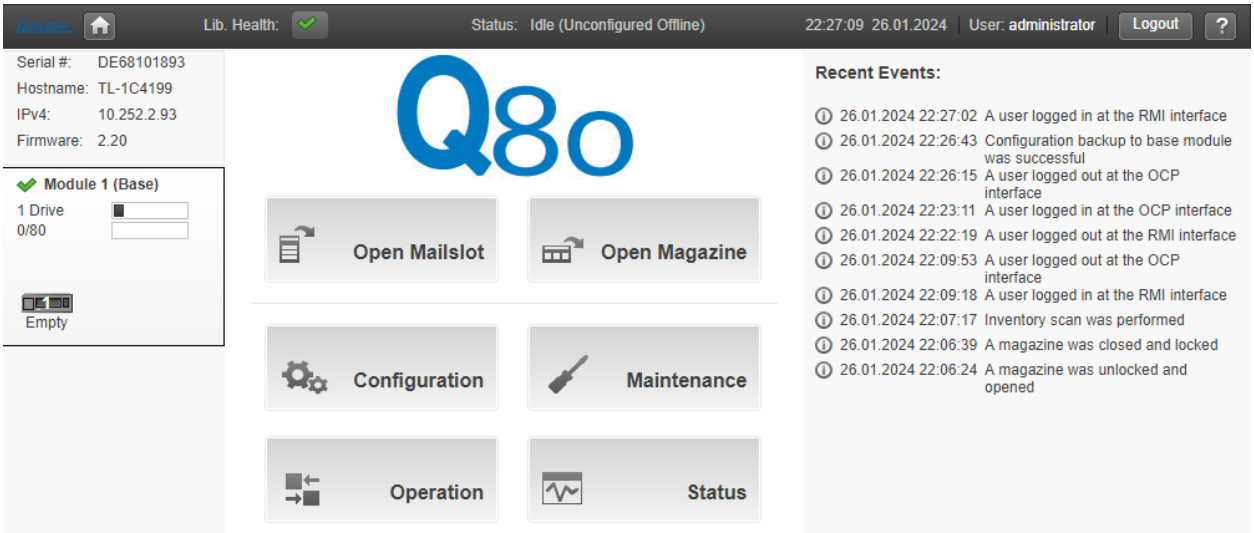

4.4.1 Top Banner Elements

- – **Home Icon** – Returns to the library main screen
- **Library Health** – An icon indicating the overall health status of the library
    - – The green check mark Status OK icon indicates that all library components are fully operational and that no user intervention is required.
    - – The yellow triangle exclamation point Status Warning icon indicates that user attention is necessary, but that the library can still perform most operations. Click the icon to display the event ticket log.
    - – The red circle X Status Error icon indicates that user intervention is required and the library is not capable of performing some operations. Click the icon to display the event ticket log.
- **Status** – The status of the library robotic
    - **Idle** – The library robotic is ready to perform an action.
    - **Moving** – The library robotic is moving a cartridge.
    - **Scanning** – The library robotic is performing an inventory of cartridges.
    - **Offline** – The library robotic has been taken off line by the library.

- **Library Time & Date** – helpful when analyzing event logs and support tickets, and might be needed when contacting support.
- **User** – The user account for this session.
- **Logout** – Logs out of this session.
- **?** – Accesses online help.

4.4.2 Left Pane Elements

- **Library Status** – Overall library confirmation and status
    - **Serial #** – The base library serial number
    - **Hostname** – The library hostname
    - **Network Configuration** – The IP version (IPv4 or IPv6) and IP address
    - **Firmware** – The library firmware version
- **Module Status Overviews** – A summary of each module's configuration and health. Click or tap the module status area to select the module.
    - Module Health Icon
        - The green check mark Status OK icon indicates that the module and each of its components are fully operational and that no user intervention is required.
        - The yellow triangle explanation point Status Warning icon indicates that user attention is necessary, but that the library can still perform most operations.
        - The red circle X Status Error icon indicates that user intervention is required and the module is not capable of performing some operations.
    - Module Number – Modules are numbered based on their location in the physical library. The bottom module is **Module 1**. The base library module is annotated with (**Base**).
    - Drive Status – The number of drives installed in the module and the health of each drive. Click or tap on the drive to display drive configuration and status information in the center pane.
        - A black square indicates that the drive is fully operational and that no user intervention is required.
        - A yellow square indicates that user attention is necessary, but that the drive can still perform most operations.
        - A red square indicates that user intervention is required or the drive is not capable of performing some operations.
    - Magazine Slot Usage – The number of cartridge slots available and the number in use.
    - Drive Operation Status – The \ current drive activity for each drive in the module. The drive operation status is only displayed for the selected module.
        - Write – The drive is performing a write operation.
        - Read – The drive is performing a read operation.
        - Idle – A cartridge is in the drive but the drive is not performing an operation.
        - Empty – The drive is empty.
        - Encryp – The drive is writing encrypted data.

© Copyright QUALSTAR 2016

4.4.3 Center Pane Elements

- **Open Mailslot** – (Administrator user only) Click or tap to unlock the mailslot on the selected module. Mailslots must be enabled before the slots can be used as mailslots. See "**Enabling or Disabling Mailslots**".
- **Open Magazine** – (Administrator user only) Click or tap to unlock a magazine in the selected module. Only one magazine in the library can be open at a time. See "**Opening a Magazine**".
- **Configuration** – (Administrator user only) Click or tap to configure the library. See "**Configuring the Library**".
- **Maintenance** – (Administrator user only) Click or tap to access maintenance functions. See "**Maintaining the Library**".
- **Operation** – (Administrator user only) Click or tap to access operation functions. See "**Operating the Library**".
- **Status** – Click or tap to access status information. See "**Viewing Status Information**".
- **Service Area** – (Service user only) Click or tap to access to functionality restricted to Service engineers.

4.5 Configuring the Library

4.5.1 Using the Initial Configuration Wizard

The wizard guides you through setting the administrator password, configuring the time zone, date and time, and library network settings, and then starting an initial system test. You can skip items and stop the wizard at any time. Once you have configured the network settings and set the administrator password from the OCP, you can initiate the wizard from the RMI or OCP to complete the remaining configurations.

4.5.2 Saving, Restoring and Resetting the Library Configuration

From the **Configuration > System > Save/Restore Configuration** screen you can save the library configuration settings to a file, restore the settings, or reset the library configuration to the default settings. The saved configuration database will make it easier to recover the library configuration if you need to replace the base module or base module controller.

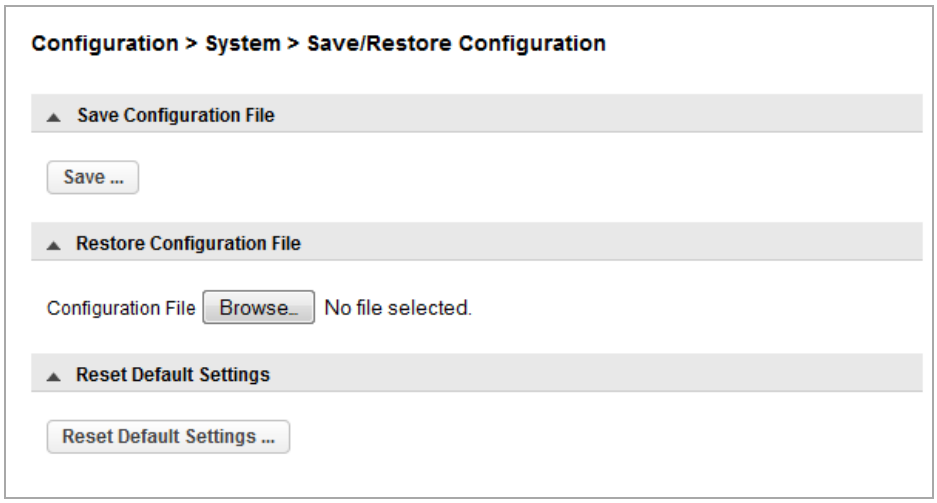

Saving the library configuration to a file

1. Navigate to the **Configuration > System > Save/Restore Configuration** screen as shown above.
2. For saving the configuration file to a USB device on the library, insert a USB flash drive into one of the USB ports on the base module.
3. Select the destination location:
   - **RMI** – (RMI only) Downloads the configuration file to the browser or system running the RMI
   - **USB Device Front** - Downloads the configuration file to a USB flash drive inserted into the USB port on the front of the library
   - **USB Device Rear** - Downloads the configuration file to a USB flash drive inserted into the USB port in the back of the library
4. Click **Save**

Restoring the library configuration from a file

1. Restoring the configuration file from a USB device, copy the .ZIP configuration file you want to restore onto the USB device and remove any other configuration files from the USB device.
2. Navigate to the **Configuration > System > Save/Restore Configuration** screen.
3. If you will be restoring the configuration file from a USB device on the library, insert the USB flash drive containing the configuration file into one of the USB ports on the base module.
4. Select the source location:
   - **RMI** – (**RMI** only) Restores the configuration file from the computer running the RMI. Click **Browse** to navigate to and select the configuration file.
   - **USB Device Front** – Restores the configuration file from a USB flash drive inserted into the USB port on the front of the library.
   - **USB Device Rear** – Restores the configuration file from a USB flash drive inserted into the USB port in the back of the library.
5. Click **Browse**.

Resetting the default settings

To reset the library configuration to the default settings, click **Reset Default Settings**. For the default settings, see "**Defaults and Restore Defaults Settings**".

4.5.3 Configuring the Date and Time Format

To configure date and time format parameters and to use an SNTP server, from the Configuration area, navigate to the **System > Date and Time Format** screen.

NOTE The library does not adjust its time for daylight saving time; the time must be adjusted manually.

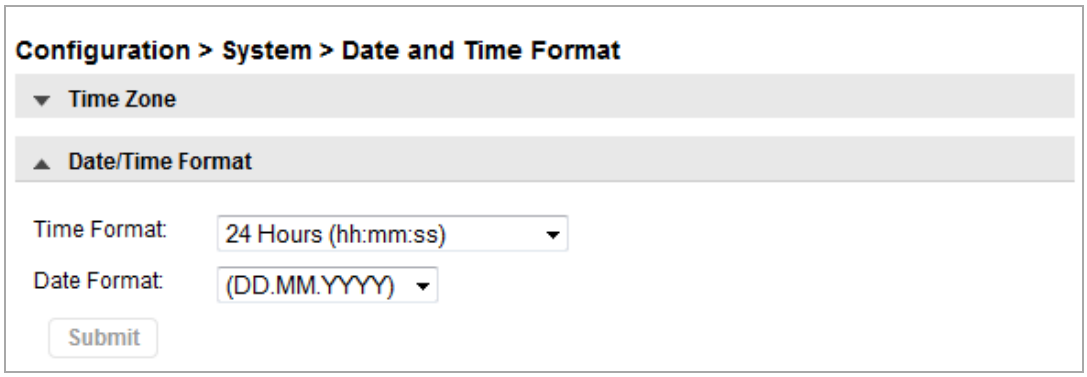

Setting the time zone

1. Click **Time Zone**.

   A list of continents, countries, and regions is displayed. When an item proceeded with *'>',* for example> **US**, is selected, a submenu is displayed in the next column.

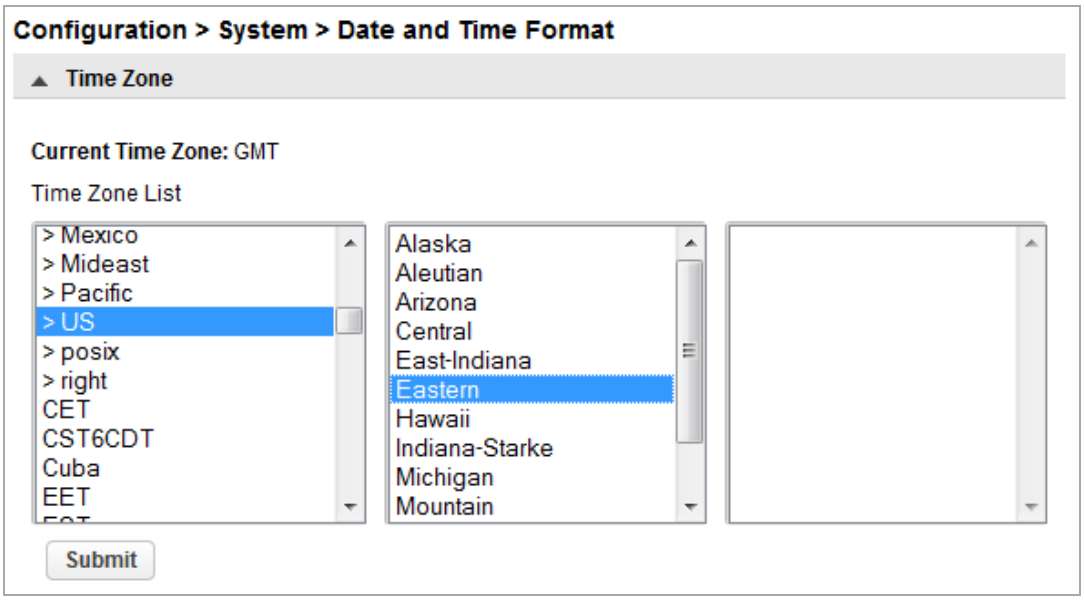

2. Expand the time zone list, as necessary, until a location with the appropriate time zone is visible.
3. Select a location with the appropriate time zone.
4. Click **Submit**.

Setting the date and time format

1. Click **Date/Time Format**.

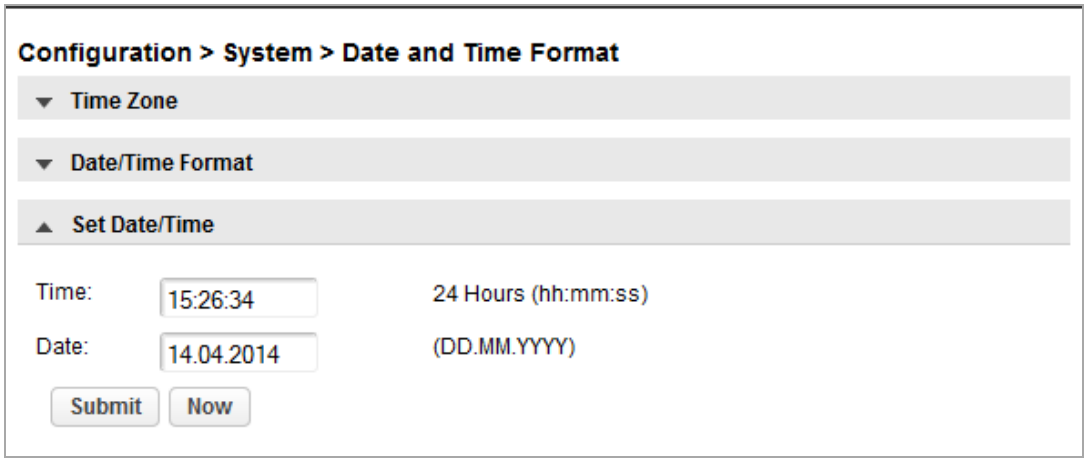

2. Select a time format.
3. Select a date format:

   For example, July 30, 2013 is displayed as:

   - DD.MM.YYYY - 30.07.2013
   - MM/DD/YYYY - 07/30/2013
   - YYYY-MM-DD - 2013-07-30
4. Click **Submit**.

Enabling SNTP (Simple Network Time Protocol) Synchronization

The library must have network access to an SNTP server.

1. Click **SNTP**.

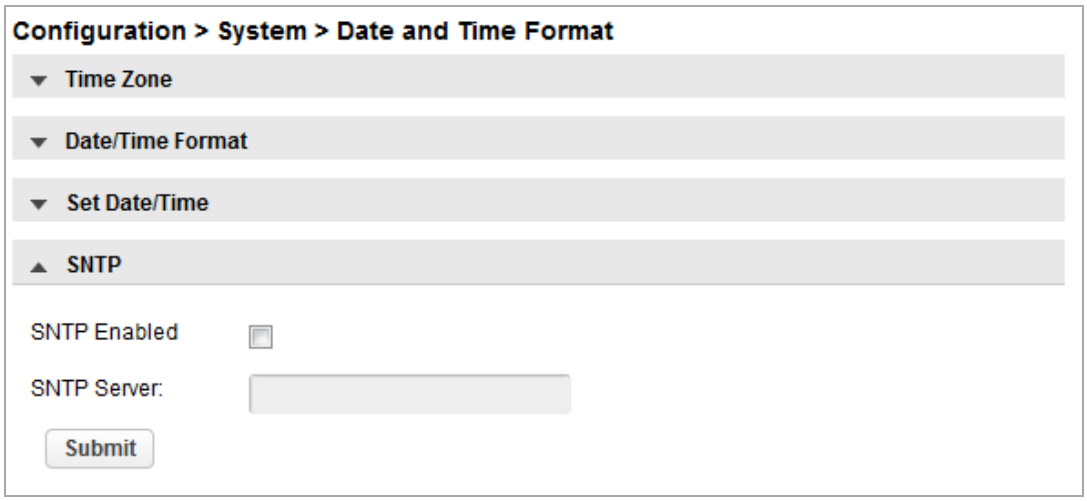

2. Click **SNTP Enabled**.
3. Enter the SNTP server address.
4. Click **Submit**.

4.5.4 Configuring Media Barcode Compatibility Checking

From the **Configuration > System > Media Barcode Compatibility Check** screen you can enable or disable the barcode media ID check.

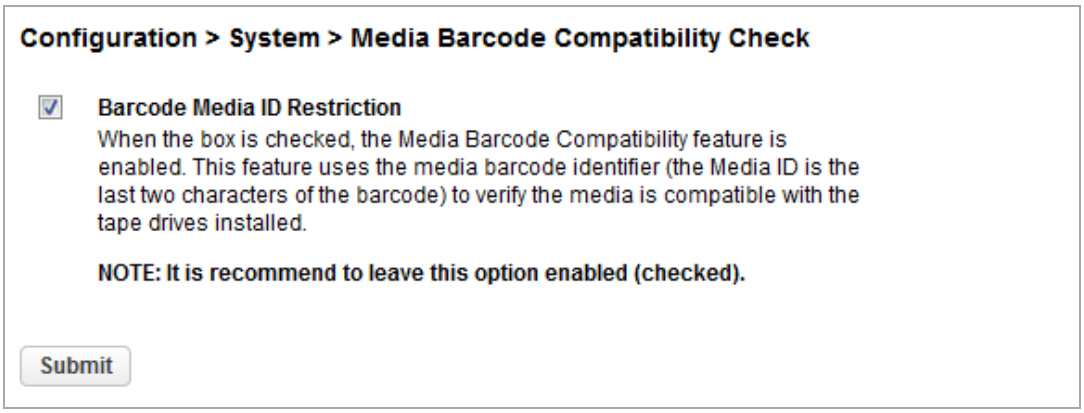

When **Barcode Media ID Restriction** is enabled, the library will only allow appropriate tape cartridges to be loaded into tape drives. The barcode media ID is the last two characters of the barcode. For example, an LTO-6 labeled cartridge will not be allowed to move into an LTO-4 tape drive.

When disabled, the library will move any tape to any tape drive. If the cartridge is incompatible with the tape drive, the library will display a message.

NOTE It is strongly recommended that all cartridges have barcode labels with the correct media ID, and that the Barcode Media ID Restriction is enabled.

4.5.5 Configuring the Library Network Settings

From the **Configuration > Network** screen you can configure the library network settings.

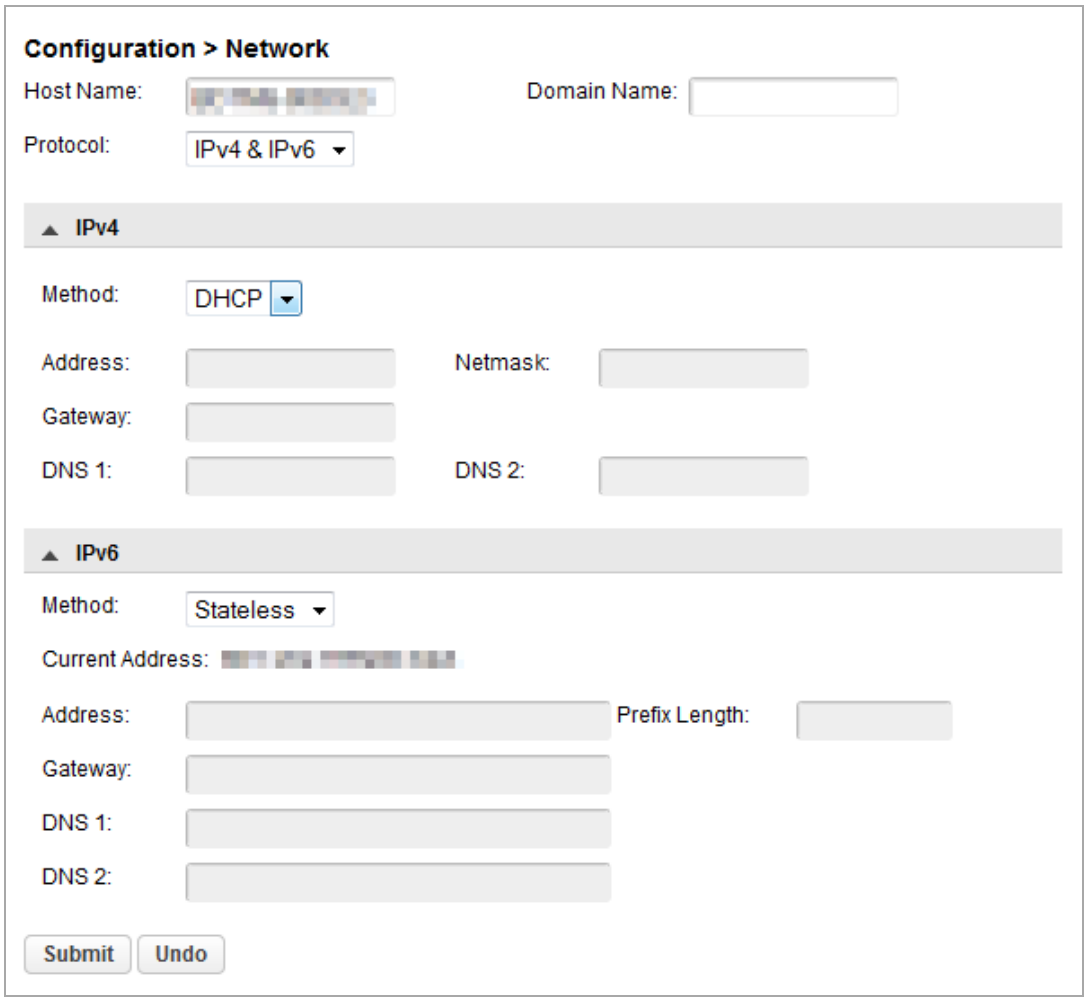

1. Navigate to the **Configuration > Network** screen.
2. Configure or update the **Host Name** and **Domain Name**. The RMI URL is *<Host Name>.<Domain Name>*.
3. Select the internet protocol to use for the library.
4. Configure the settings for the selected internet protocol.

   To have the library obtain an internet address from a DHCP server, select the DHCP or Stateless method.
5. Click **Submit**.

4.5.6 Configuring SNMP

Use the **Configuration > Network Management** screen to enable and configure SNMP (Simple Network Management Protocol), which allows applications to manage the device. The library supports both SNMP configuration and SNMP traps.

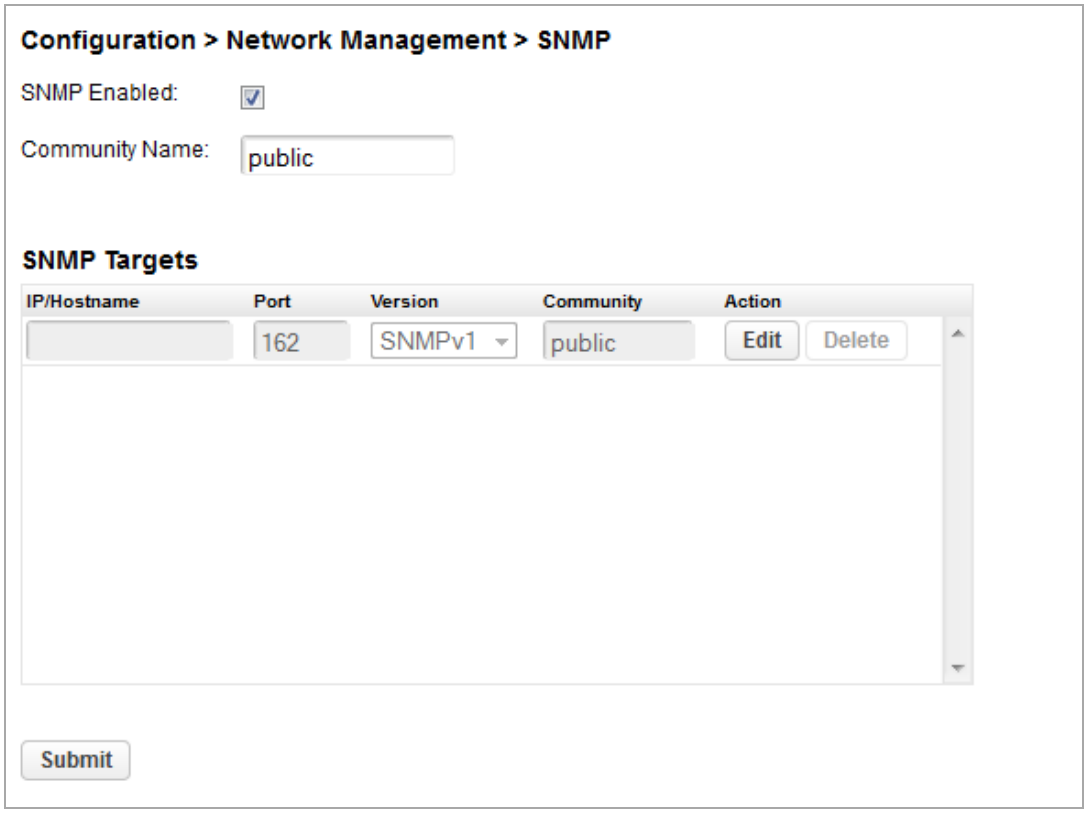

- **SNMP Enabled** – When checked, the library can be managed by computers listed in the SNMP Target IP Addresses field.
- **Community Name** – A string used to match the SNMP management station and library. It must be set to the same name on both the management station and the library. The default community name is *public*.
- **SNMP Targets** – List of configured SNMP targets.

To add an SNMP target or edit information for an SNMP target:

1. Click **Edit** for the appropriate SNMP target. When adding an SNMP target, click **Edit** next to a target without an IP/Hostname.
2. Enter the target IP address or hostname
3. Enter the port.
4. Select the SNMP version.
5. Enter the SNMP community string for the target.
6. Click **Submit**.

To delete an SNMP target:

1. Click **Delete** for the target to be deleted.
2. Click **Submit**.

© Copyright QUALSTAR 2016

4.5.7 Configuring Event Notification Parameters

From the **Configuration > Network Management > SMTP** screen you can enable SMTP (Simple Mail Transfer Protocol) functionality and configure e-mail notification of library events. The library must have network access to an SMTP server.

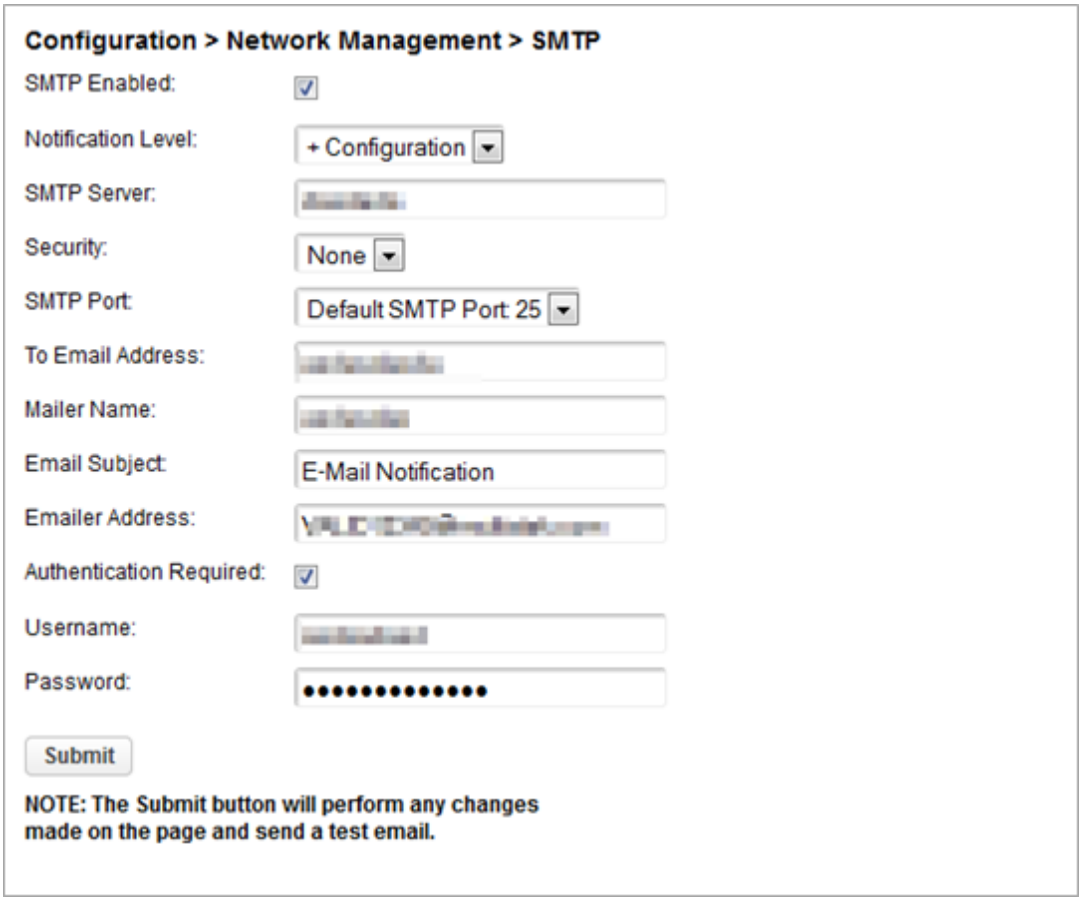

- **SMTP Enabled** – Check to enable SMTP. When checked, the remaining configurations are active.
- **Notification Level** – The types of events for which the library should send e-mail
  - **Inactive** – No events are sent.
  - **Critical** – Only critical events are sent.
  - **+ Warnings** – Only critical and warning events are sent.
  - **+ Configuration** – Only critical, warning, and configuration events are sent.
  - **+ Information** – All events are sent.
- **SMTP Server** – Hostname or IP address of the SMTP server
- **Security** – Security protocol for accessing the SMTP server
  - **None**
  - **SSL**
  - **TLS**
- **SMTP Port** – SMTP server port. The default port for the selected protocol will be selected. You can choose one of the default ports or configure a custom port.

- **To Email Address** – The address to receive the reported events (for example firstname.lastname@example.com). Only one email address can be configured.
- **Mailer Name** – Name of the sender of the e-mail
- **Email Subject** – Subject line for the e-mail message
- **Emailer Address** – Return address to use for the e-mail message
- **Authentication Required** – When checked, a username and password are required to access the SMTP server.
- **Username** – User account for logging into the SMTP server when authentication is required
- **Password** – Password associated with the Username when authentication is required

4.5.8 Configuring Tape Drives

From the **Configuration > Drives** screen you can see and modify drive configuration.

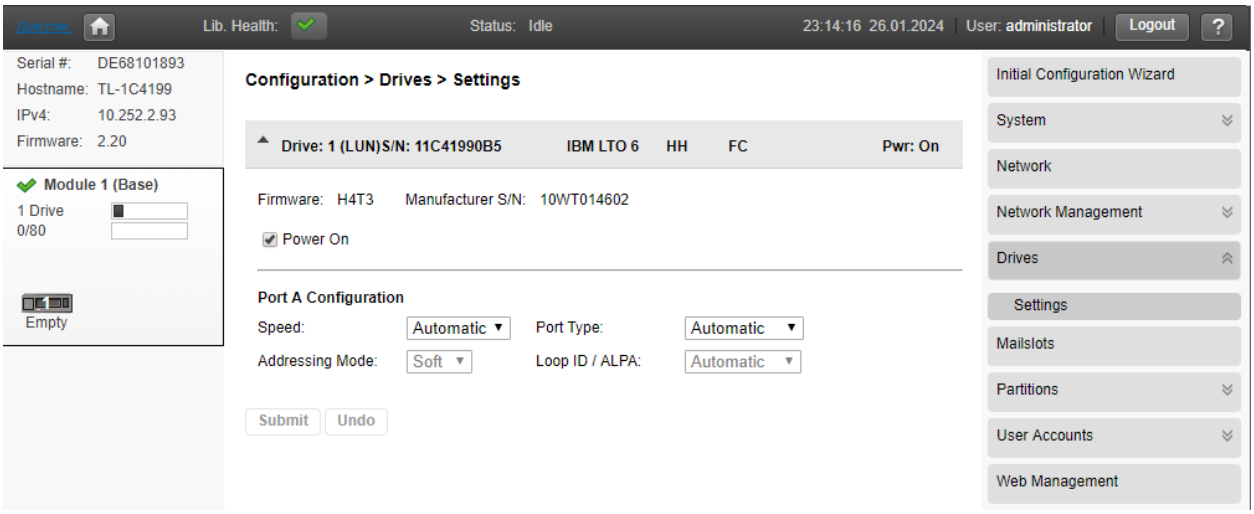

- Drive number – Drives are numbered from the bottom of the library up beginning with one. All drives that are currently hosting SCSI communications for the library is designated with (LUN).
- Serial Number – The serial number assigned to the tape drive by the library. This serial number is reported to host applications. The serial number cannot be modified.

This is not the serial number assigned to the drive by the manufacturer; the serial number assigned by the manufacturer is shown in Manufacturer S/N.

- LTO generation
  - LTO 6
- Drive form factor
  - HH – half height
- Drive interface
  - FC – Fibre Channel
  - SAS – Serial Attached SCSI
- (Modified) – When present indicates that a setting has been changed. To apply the changes, click **Submit**. To reset all changed fields to their previously saved values, click **Undo**.

- **Pwr** – Indicates whether the drive is currently powered on or off.
- **Firmware** – The version of firmware currently installed on the drive.
- **Manufacturer S/N** – The serial number assigned to the drive when it was manufactured. Use this serial number when working with Qualstar Service.
- **Power On** – Checked when the drive is powered on.

NOTE Always power off a tape drive before removing it from the library or moving it to a new location within the library.

- Port configuration (FC only) – Drive port configuration.
  - **Speed** –The currently selected ◦ speed. The default is Automatic.
  - **Port Type**
    - **Automatic**
    - **Loop** – Enables selection of the Addressing Mode.
    - **Fabric**
  - **Addressing Mode** – When Port Type is set to Loop, Addressing Mode can be set to **Soft**, **Hard**, or **Hard Autoselect**.
  - **ALPA** – When Addressing Mode is set to Hard, you can choose an ALPA address from the drop down list.

To modify the configuration of one or more tape drives:

1. Modify any of the configurable values.
2. Click **Submit**.

NOTE To configure the number of barcode characters to report to the host application and whether to report them from the left or right end of the label, use either the Basic Partition Wizard or Expert Partition Wizard. See "**Using the Basic Partition Wizard**" or "**Using the Expert Partition Wizard**".

4.5.9 Enabling or Disabling Mailslots

The **Configuration > Mailslot** screen lists each of the mailslots and shows whether each is enabled or disabled. To change the state, click the button for the mailslot and then click **Submit**. Slots not enabled as mailslots are available as storage slots.

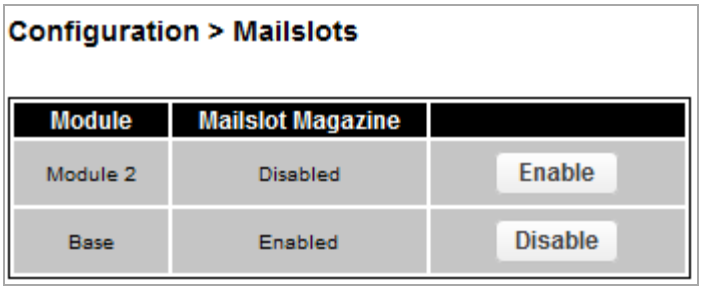

4.6 Element Numbering

The library will generally display logical element numbering of modules, storage slots and tape drives starting with number one from the bottom up.

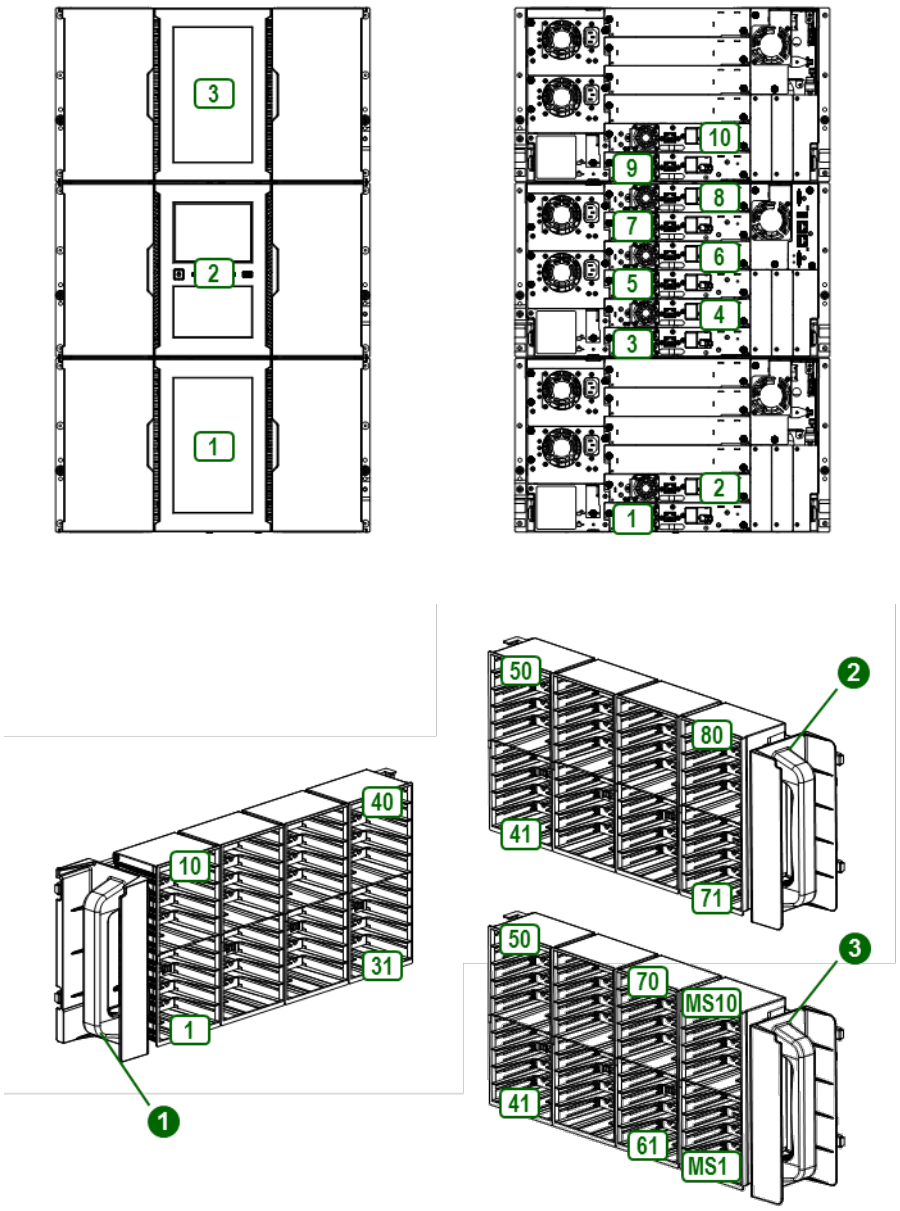

1	Left Magazine
2	Right Magazine, Mailslot Disabled
3	Right Magazine, Mailslot Enabled

4.6.1 Configuring Library Partitions

The library has a flexible partitioning scheme with a few key constraints:

- Each partition must have at least one tape drive. One drive in each partition will host the library LUN for the partition.
- The maximum number of partitions is 20.
- Magazine slots are allocated in five-slot groups.
- Mailslots must be enabled for a module before they can be allocated to a partition.

  A partition does not need to have a mailslot. If a partition does not have a mailslot, the magazine must be accessed to import or export cartridges. Opening a magazine takes the library off line.

  Although the mailslot magazine is shared between partitions, the mailslot elements are assigned individually to partitions.

Wizards guide you through the partition configuration process. The wizards are only accessible from the RMI.

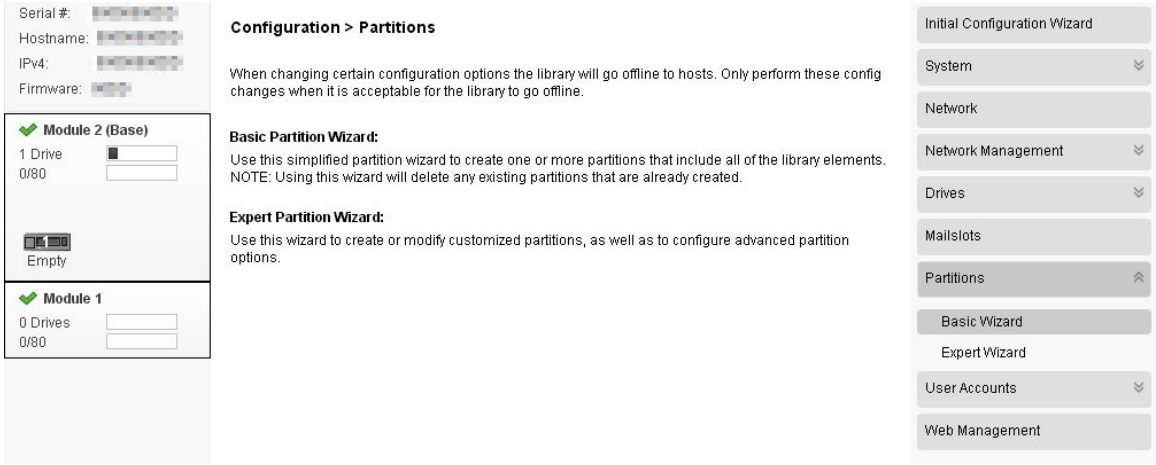

- Basic Partition Wizard – You specify the number of partitions and the wizard removes the current partition configuration and assigns the drives and storage slots as evenly as possible to the partitions. Any extra drives or slots are assigned to the first partition.

  Use the Basic Partition Wizard to configure partitions that will have similar resources or to configure the number of barcode characters to report to the host application and whether to report them from the left or right end of the label for a library with a single partition.
- Expert Partition Wizard – You add or remove partitions from the current partitions configuration and then edit each partition configuration to add or remove library resources.

  Use the Expert Partition Wizard to configure partitions that will have different resources or to adjust resource assignments for existing partitions or those created with the Basic Partition Wizard.

CAUTION The library will go off line while partitions are being configured. Ensure that all host operations are idle before running a partition wizard.

4.6.1.1 Using the Basic Partition Wizard

1. Click **Configuration** > **Basic Wizard** to start the wizard.

The **Information** screen displays the existing partitions, which will be deleted by the wizard.

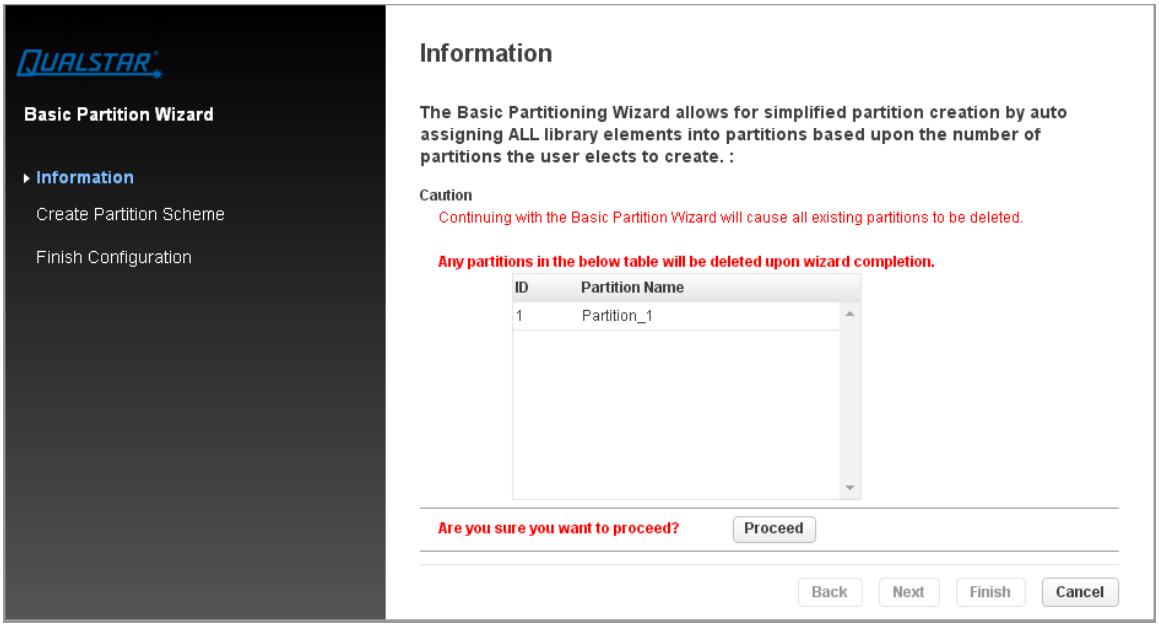

2. Click **Proceed** and then click **Next**.

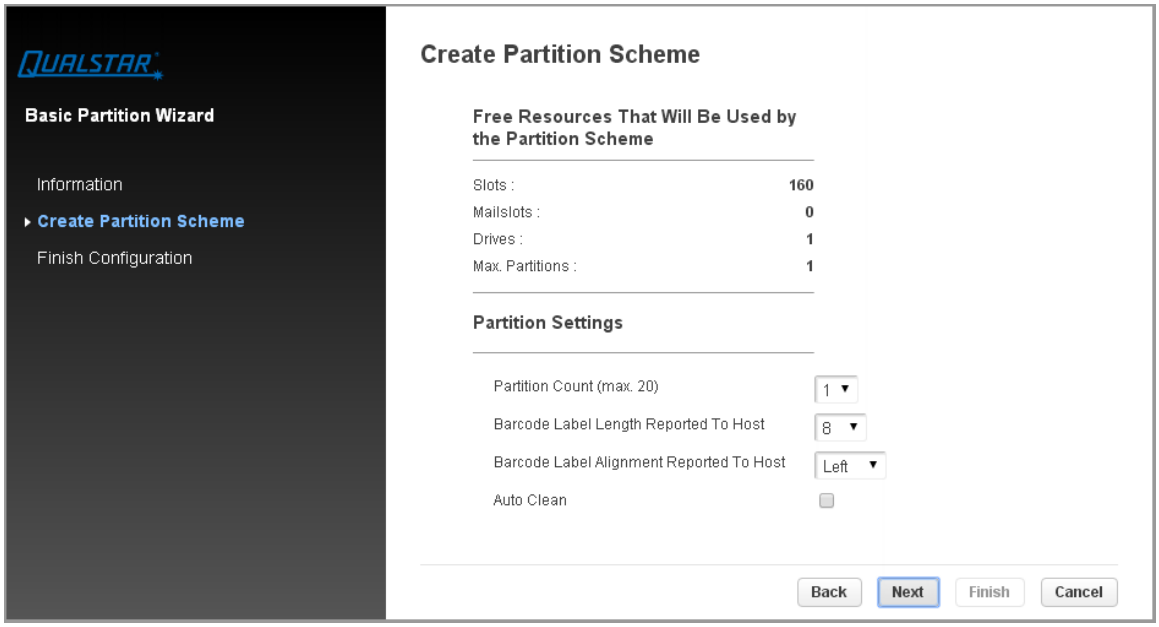

3. The **Create Partition Scheme** screen displays the number of slots, mailslots, tape drives, and maximum available partitions for the library.

NOTE If you want to enable or disable the mailslots, **Cancel** out of the wizard and update the mailslot configuration before configuring partitioning.

4. Select the number of partitions.
5. Select the number of barcode characters reported to the host application. This option provides interchange compatibility with libraries with more limited barcode reading capabilities. The maximum length is 15 and the default is 8. This configuration will apply to all partitions.

NOTE The industry standard length for LTO barcode labels is eight characters. Barcode labels longer than eight characters might scan incorrectly, particularly if they are not high quality labels.

6. Select whether to report the barcode characters from the left or right end of the barcode label to the host application when reporting fewer than the maximum number of characters. For example, when reporting only six characters of the barcode label 12345678, if alignment is left, the device will report 123456. If alignment is right, the device will report 345678. The default is left. Click Next.
7. The **Finish Configuration** screen displays the proposed allocation of library resources into partitions.

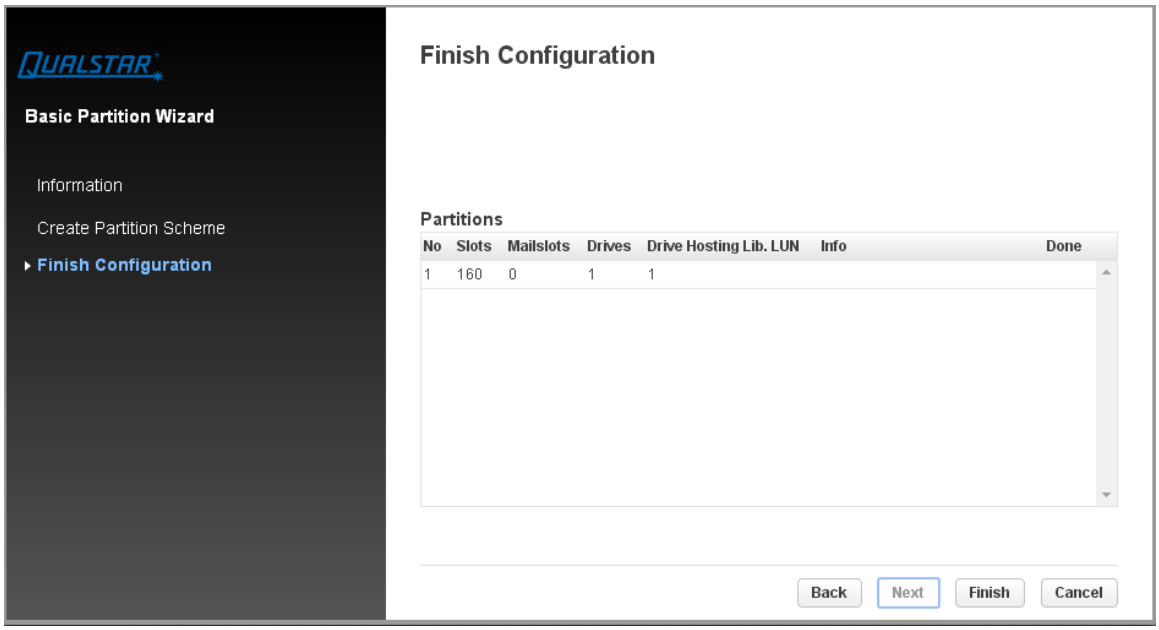

- To update the configuration, click **Back**.
- To have the wizard configure partition as shown, click **Finish**.

  After the wizard reconfigures the partition, the library will come on line automatically.
- To exit the wizard, click **Cancel** or **Exit**.

TIP You can use the Expert Partition Wizard to adjust the allocation of resources after creating the partitions with the Basic Partition Wizard.

4.6.1.2 Using the Expert Partition Wizard

Click **Configuration > Expert Wizard** to start the wizard. The **Create Partition Scheme** screen lists the current partitions, if any, and the free resources. Use the wizard to configure one partition at a time.

NOTE If you want to enable or disable the mailslots, **Cancel** out of the wizard and update the mailslot configuration before configuring partitioning.

1. To add a partition, click **Add** and then click **Next**.

NOTE The **Add** button will only be active if there are available resources. If there are no available resources, either edit a partition and release resources from it or remove a partition that contains extra resources.

2. Enter a name for the partition.
3. Select the number of barcode characters reported to the host application. This option provides interchange compatibility with libraries with more limited barcode reading capabilities. The maximum length is 15 and the default is 8. This configuration will apply to all partitions.

NOTE The industry standard length for LTO barcode labels is eight characters. Barcode labels longer than eight characters might scan incorrectly.

4. Select whether to report the barcode characters from the left or right end of the barcode label to the host application when reporting fewer than the maximum number of characters. For example, when reporting only six characters of the barcode label 12345678, if alignment is left, the device will report 123456. If alignment is right, the device will report 345678. The default is left. Click **Next**.
5. In the **Assign Storage Slots** screen, use the >> and << buttons to assign slots to the new partition and then click **Next**.
6. In the **Assign Mail Slots** screen, use the >> and << buttons to assign mailslots to the new partition and then click **Next**.

   Individual mailslot elements cannot be shared between partitions. Importing or exporting cartridges in a partition without an assigned mailslot will require magazine access, which will take the library off line.
7. In the **Assign Drives** screen, use the >> and << buttons to assign drives to the new partition and then click **Next**.
8. If the partition has multiple tape drives, select the drive that will host the SCSI library communication for the partition and then click **Next**.

   The lowest numbered drive in the partition is the default drive selected for library communication..
9. Verify the partition configuration and then click **Finish**.

   After the wizard reconfigures the partition, the library will come on line automatically.

To remove a partition:

1. Select the partition, click Remove, and then click **Next**.
2. Verify that you want to remove the partition and then click **Finish**.

   After the wizard removes the partition, the library will come on line automatically.

4.6.1.3 Adding a Driveless Partition

Click Configuration > Driveless Wizard to start the wizard. The Manage Driveless partition screen lists the current partitions, if any, and the free resources. Use the wizard to configure one driveless partition at a time.

- Driveless Logical Libararies can only be configured when Two-factor authentication is active for the current user.
- Downgrade of Library FW to a level before Driveless Partition was supported will be prevented as long as any driveless partition is present. This can be overcome by using a user with 2FA enabled.
- Restoring a Library Configuration Backup File will be prevented as long as any driveless partition is present. This can be overcome by using a user with 2FA enabled.
- Resetting the default settings of the libray will be prevented as long as any driveless partition is present. This can be overcome by using a user with 2FA enabled.

1. To add a driveless partition, click the **Add** and then **Next** button.
   To edit an existing driveless partition, click **Edit** and then click **Next**

The **Add** button will only be active if there are available resources. If there are no available resources, either edit a driveless partition and release resources from it or remove a driveless partition that contains extra resources.

2. Enter a name for the driveless partition.
3. If you want to use the **Auto Move to Driveless Partition** feature, select **Auto Move to Driveless Partition** in the **General Settings** screen.
   In the **Move from the Mailslots of** line, use the drop down arrow to select the partition that contains the tapes that you want to protect. Once this is enabled, an export of a cartridge into a Mailslot results in a move to the driveless partition.
4. In the **Assign Storage Slots** screen, use the >> and << buttons to assign slots (in groups of 5) to the new driveless partition and then click **Next**
5. Verify the driveless partition configuration and then click **Finish**.
   After the wizard reconfigures the driveless partition, the library will come online automatically.

To remove a driveless partition

1. Select the driveless partition, click **Remove**, and then click **Next.**
2. Verify that you want to remove the partition and then click **Finish**. After the wizard removes the driveless partition, the library comes online automatically.

4.6.2 Configuring Passwords for User Accounts

From the **Configuration > User Accounts** screen you can set the password for the user or administrator accounts.

- User – The *user* account allows access to library status information and does not allow access to configuration, maintenance, or operation features. A password is not required for the user account. Setting a user password restricts access to status information to only those who know the user password.
- Administrator – Setting an administrator password provides access to the administrator functions with the RMI or OCP, and restricts access to administrator functions to only those who know the administrator password. The library initially has a null administrator password, which until set allows

unrestricted access to all administrative functions through the OCP but not the RMI. Once the administrator password has been set from the OCP, it can be changed from either the OCP or RMI.

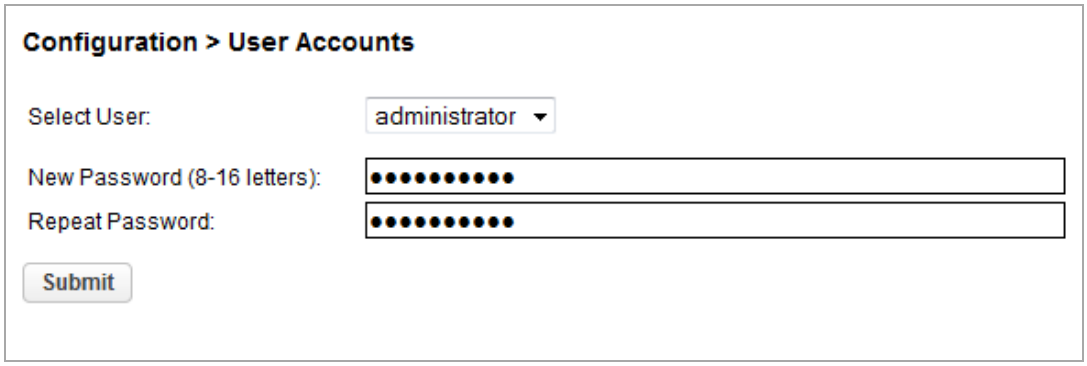

Select the user and then enter the new password twice. The password must contain 8-16 characters, which can include upper and lower case letters, numbers, and special characters.

4.6.3 Two-Factor Authentication (2FA)

- SNTP must be active to use 2FA.
- SNTP cannot be disabled if there are active 2FA users.
- Any authenticator app that supports TOTP with SHA1 can be used (e.g.: Google Authenticator, Duo, Win Auth, etc.)
- Admins who want to configure 2FA for other users must have 2FA active themselves.

To setup **Two-Factor Authentication (2FA)**

- Select the account from the list

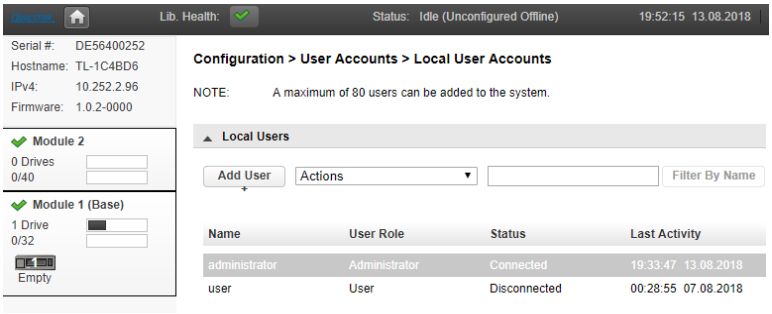

- Click the down arrow in the Actions box and choose Modify User Password

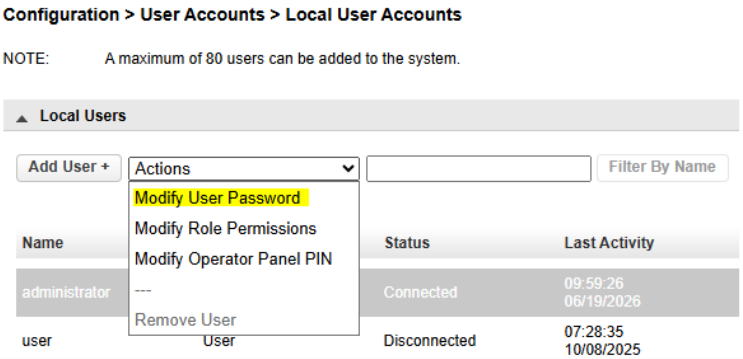

- Leave the New Password and Verify Passwords field blank.
- Check the Two-factor authentication box.

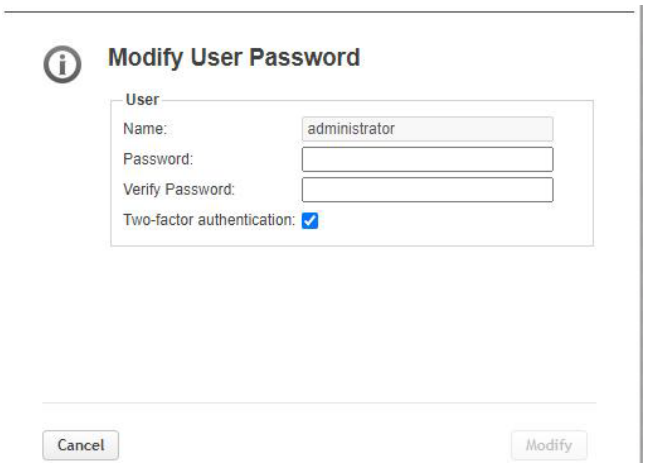

- Enabling 2FA for the current logged in user will trigger a setup of 2FA directly on the active Session.
- During this process the user can setup TOTP using the seed generated by the system or by providing a custom seed.
- If these steps are successful the TOTP will be set to active for that user:

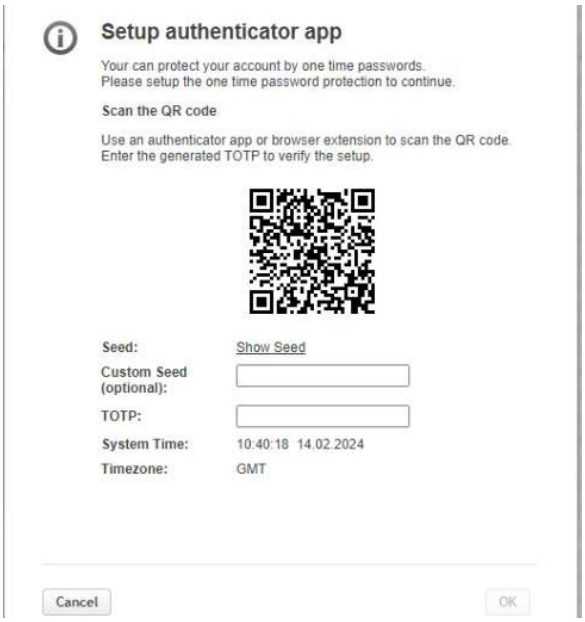

- This QR code can be scanned with an authenticator app to generate the TOTP, by clicking "Show Seed" the internal Seed (Key) can be displayed to put it manually to the app.
- If custom seed is provided, that one will be used to validate the TOTP against and if valid stored to DB.

Action	Name	User Role	Status	Last Activity
Edit	administrator	Administrator	Connected / TOTP Active	10:35:04 14.02.2024

- Setting 2FA for another user or by adding a new user will set the TOTP state to "Setup" this will trigger the user to setup the TOTP (2FA) on his next valid login:

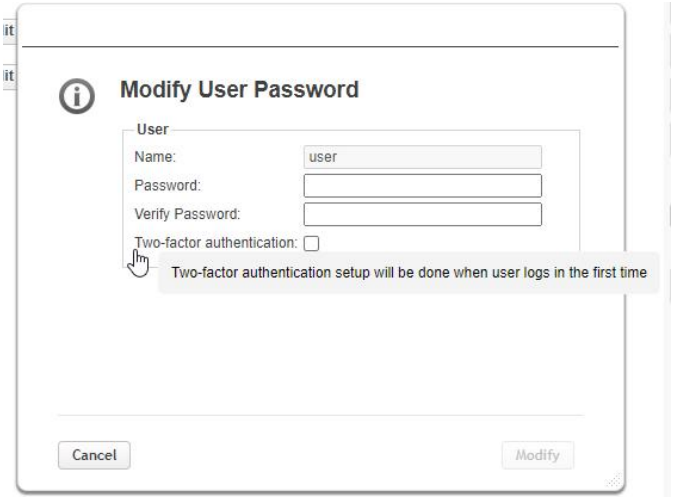

TOTP was set for another user will require that user to setup Two-step verification at his next login:

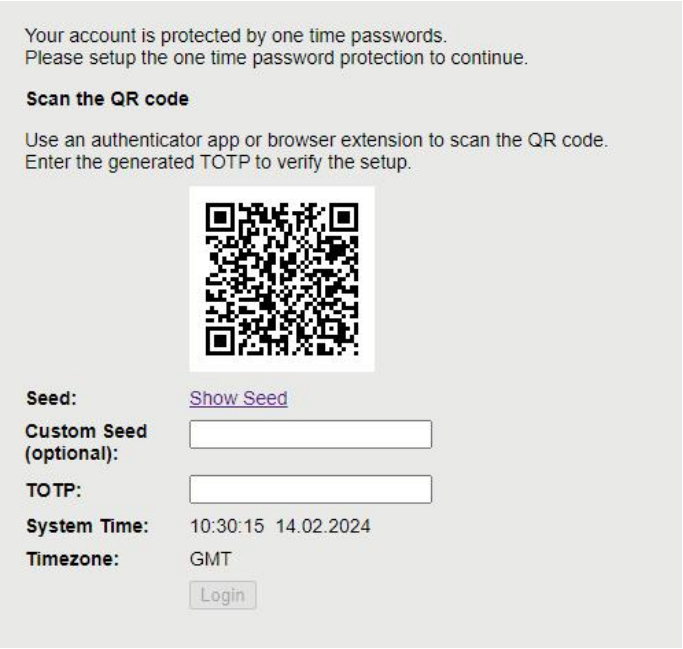

- After successful setup the TOTP is required for each login:

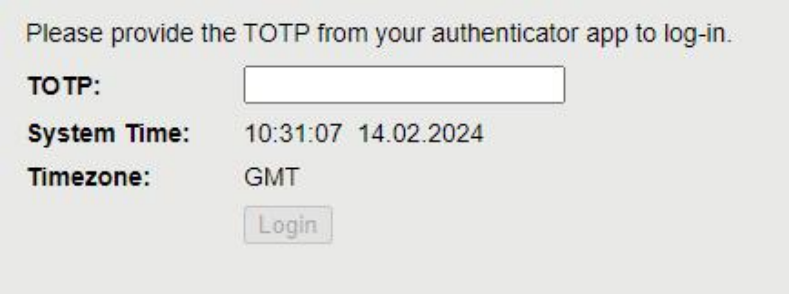

-

- If TOTP gets locked it will show a Recovery TOTP on the OCP to reset the TOTP settings for that user:

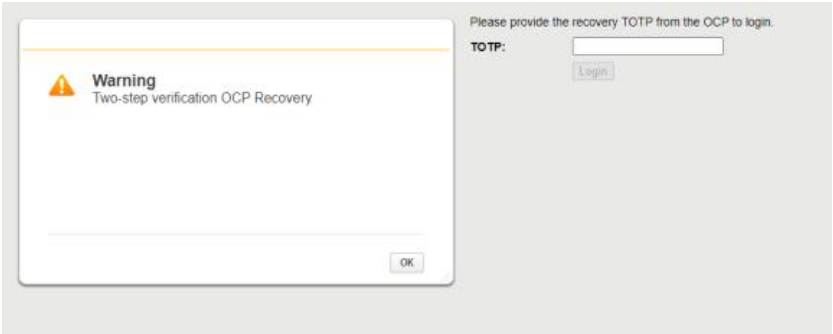

- => OCP:

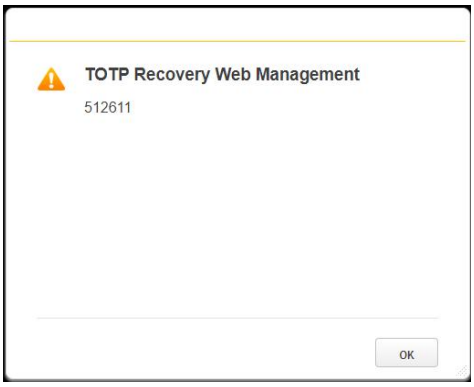

- The OCP recovery window is only displayed for a limited time.
- After recovering the account using the OCP recovery method the user is required to setup Two-step verification again.

4.6.4 Enabling SSL or SSH

Enable or disable secure access to the RMI using Secure Socket Layer (SSL) or Secure Shell (SSH) from the **Configuration > Web Management** screen. When SSL is enabled, connections to the RMI must use HTTPS. The default is disabled.

When SSH is enabled, the library will only accept SSH connections. The default is enabled.

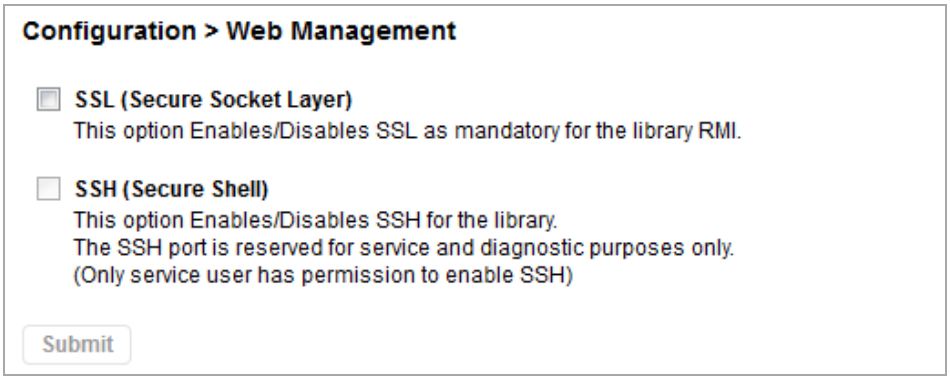

4.7 Maintaining the Library

From the Home screen click or tap on **Maintenance** to access the library maintenance features.

4.7.1 System Test

The system test exercises overall library functionality by moving cartridges within the library.

- During each cycle the library will move a cartridge from a full slot to an empty slot and then return it to its original slot. You can select the number of cycles for the test. If the test is cancelled, the library will return the cartridge to its original slot.
- The library will not move cleaning cartridges during the test.
- The test operates over the whole library and does not take into account partition configuration.
- During the test the entire library is off line.

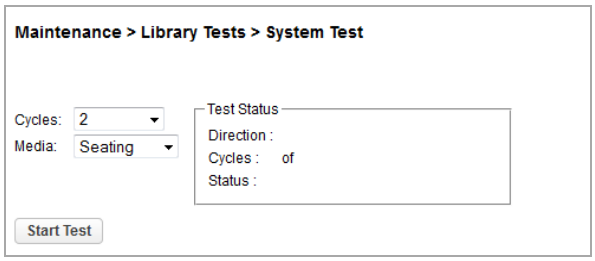

To run the system test:

1. Navigate to the **Maintenance > Library Tests > System Test** screen.
2. Select the number of cycles.
3. Select the media handling option:
   - **Seating** – The cartridge is loaded into the tape drive but is not threaded onto the take up reel. Choose this option for a faster test.
   - **Threading** – The cartridge is loaded into the tape drive and threaded in the drive. Choose this option for a more complete test of the tape drive mechanical operation.
4. Click **Start Test.**

© Copyright QUALSTAR 2016

4.7.2 Slot to Slot Test

The slot to slot test randomly exchanges cartridges between slots to verify that the library is operating correctly. At the end of the test the cartridges are NOT returned to their original slots. If a tape is moved to an incompatible drive, the drive will reject the tape, as designed.

CAUTION The slot to slot test can mix cartridges between partitions. For service and diagnostics, use the robotic test.

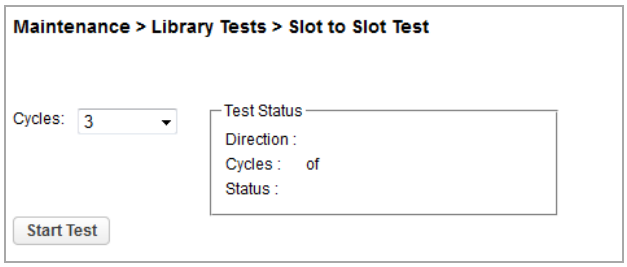

To run the slot to slot test, navigate to the **Maintenance > Library Tests > Slot to Slot Test** screen, select the number of cycles and click **Start Test**.

4.7.3 Element to Element Test

The element to element test moves a selected cartridge to a selected slot or tape drive, and then returns it to the original slot. You can select the number of times to move the selected cartridge to the destination location and back.

The element to element test is intended to show that the library is operating correctly. To diagnose problems with the robotic assembly or verify that it has been correctly replaced, use the robotic test.

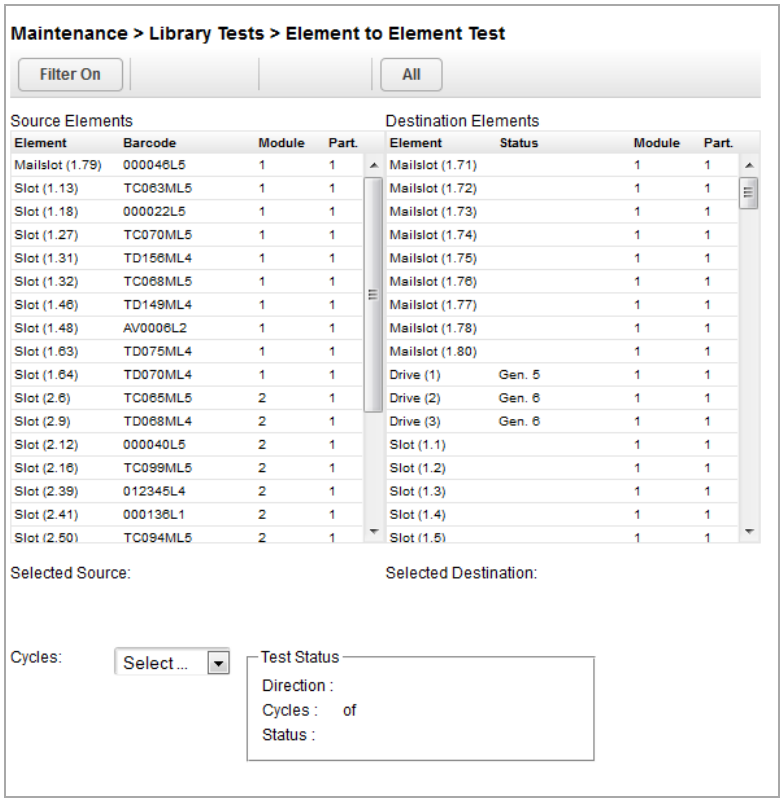

To run the element test:

1. Navigate to the **Maintenance > Library Tests > Element to Element Test** screen.
2. Select a cartridge from the **Source Elements** list.

   To select from a subset of the cartridges:

   a. Click **Filter On**.

   b. Enter characters into the search box and then click **Search**.

      The **Source Elements** list is updated to only include cartridges with a barcode label including the search characters.
3. Select a location from the **Destination Elements** list.
4. Select the number of cycles.
5. Click **Start Test**.

4.7.4 Robotic Test

The robotic test performs a full inventory and exercises all robotic assembly movements and sensors.

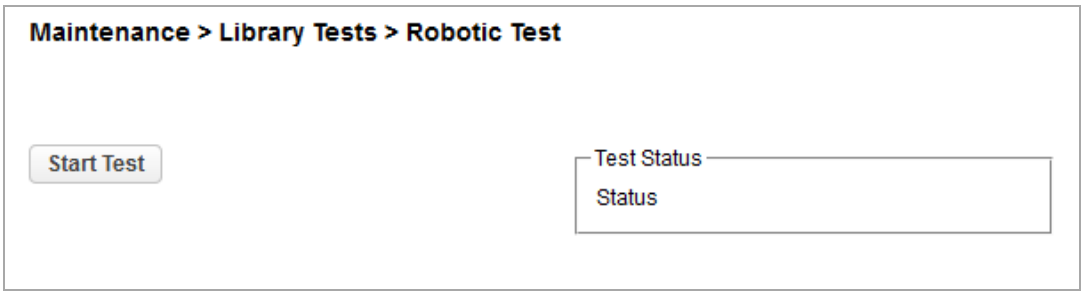

To run the robotic test, navigate to the **Maintenance > Library Tests > Robotic Test** screen, then click **Start Test**.

4.7.5 OCP Test and Calibration

To test or calibrate the OCP, navigate to the **Maintenance > Library Tests > OCP Test** screen, select the operation, and then click **Start**. Follow the instructions on the screen.

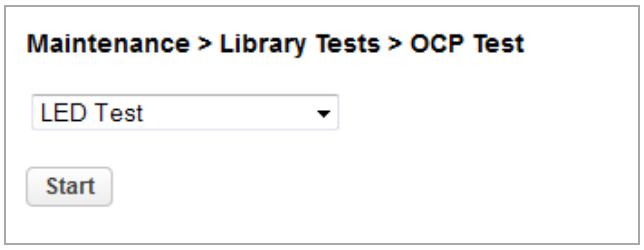

- LED test – illuminates each of the front panel LEDs
- Touch panel calibration test – allows you to calibrate the front panel touch screen

4.7.6 Viewing Log Files

To view the library log files, navigate to the **Maintenance > Logs and Traces > View Logs** screen and then select one of the logs. The available logs are:

- Event Ticket Log – Records library error and warning events
- Information Log – Records library information warnings
- Configuration Log – Records configuration changes

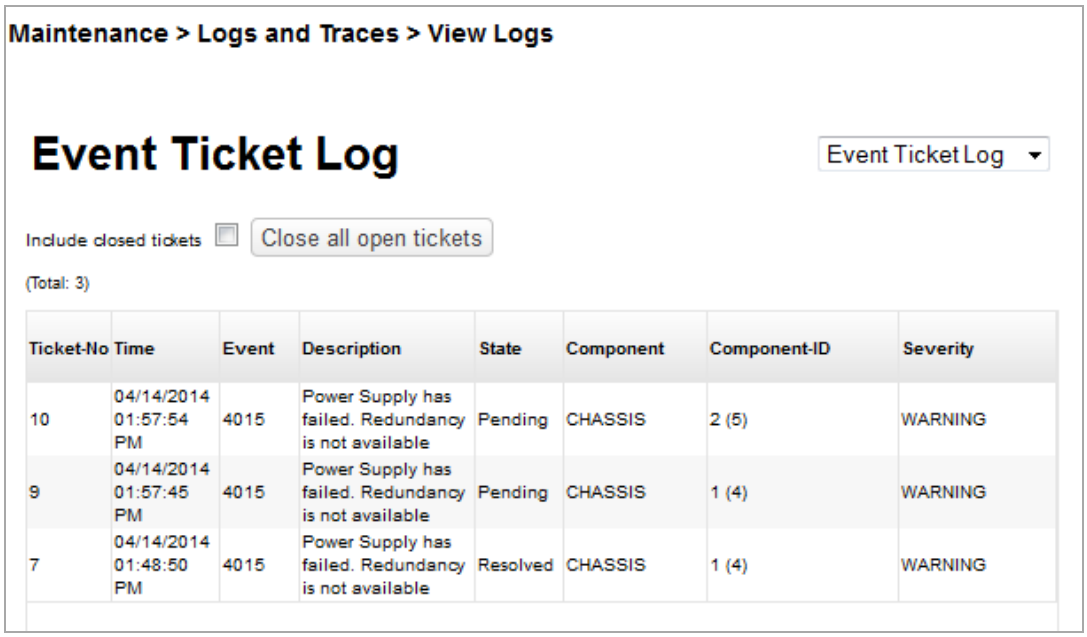

Ticket-No	Time	Event	Description	State	Component	Component-ID	Severity
10	04/14/2014 01:57:54 PM	4015	Power Supply has failed. Redundancy is not available	Pending	CHASSIS	2 (5)	WARNING
9	04/14/2014 01:57:45 PM	4015	Power Supply has failed. Redundancy is not available	Pending	CHASSIS	1 (4)	WARNING
7	04/14/2014 01:48:50 PM	4015	Power Supply has failed. Redundancy is not available	Resolved	CHASSIS	1 (4)	WARNING

The log entries are displayed in order of most recent to oldest. The log entries contain a date and time code, event code, severity, component identifier and event details. The format for the date and time is: *YY.MM.DD HH.MM.SS.ss*.

- YY.MM.DD – The date displayed as Year.Month.Day
- HH.MM.SS.ss – The time displayed as Hour.Minute.Second.Hundredths of a second

4.7.7 Managing System Firmware

The firmware version currently installed on the library is displayed in the library status area on the Home page. You update the library firmware from the **Maintenance > Software Upgrades > System Firmware** screen.

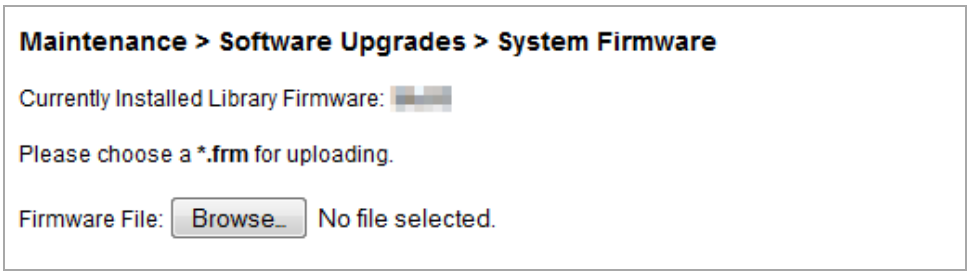

To update library firmware from the RMI, click **Choose File** and select the firmware file from the local computer.

To update the library firmware from the OCP:

1. Copy the firmware file to the USB thumb drive.
2. Insert the USB thumb drive into the USB port on the front of the library.

   The library detects the USB thumb drive.
3. Select the firmware file.
4. Click **Start Upgrade**.

When you update the library firmware, the library will update the firmware of the expansion modules to a compatible version.

4.7.8 Managing Drive Firmware

Drive firmware can be updated on multiple drives of the same type at the same time. Drive firmware can only be updated from the RMI. Each drive will only accept appropriate firmware.

To see the firmware version currently installed on the drives, navigate to the **Status > Drive Status** screen.

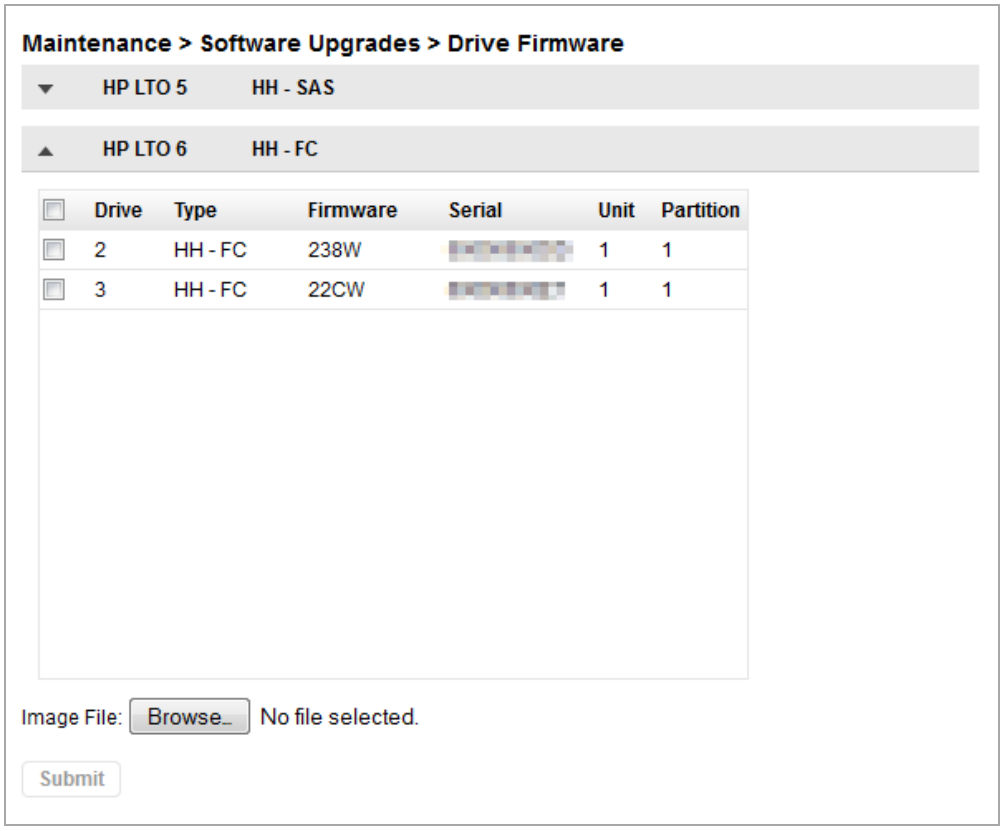

To update drive firmware from the RMI:

1. Navigate to the **Maintenance > Software Upgrades > Drive Firmware** screen. The tape drives are organized by drive type.
2. Expand the appropriate drive type and select one or more of the tape drives.
3. Click **Choose File**, and then select the file from the local computer.
4. Click **Submit**.

4.7.9 Downloading Support Tickets

From the **Maintenance > Download Support Ticket** screen you can download a support ticket from the library or any of the tape drives.

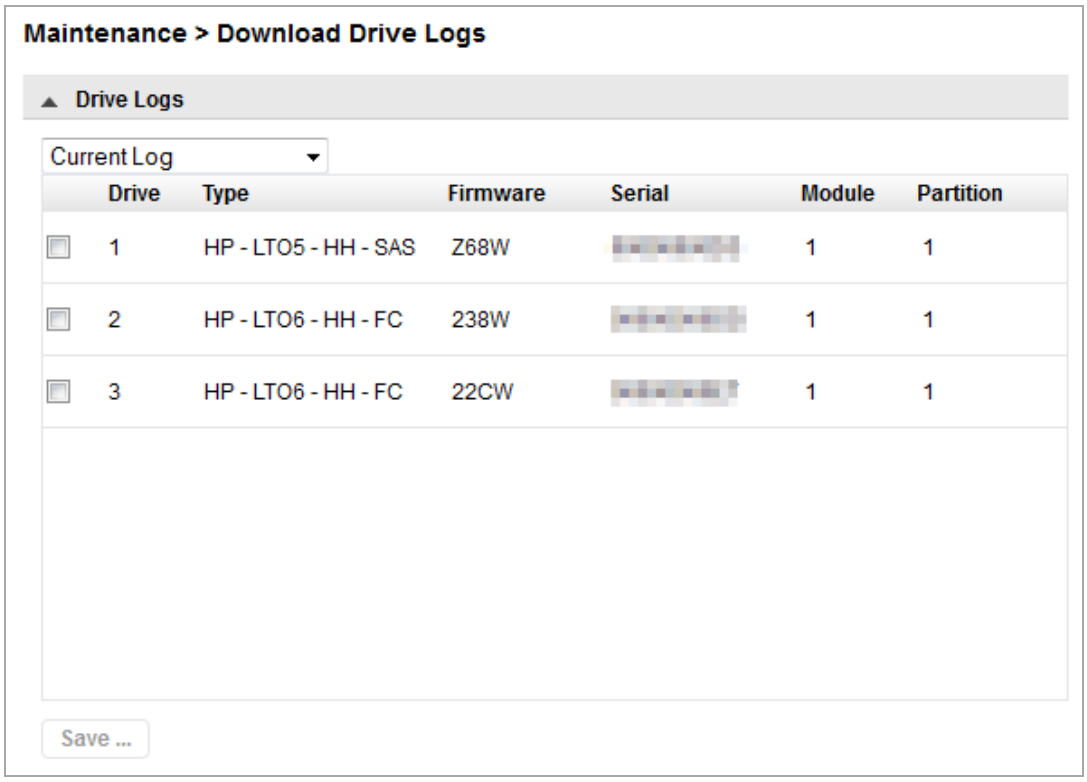

To download a drive support ticket:

1. Expand the **Drive Support Ticket List**, if necessary, by clicking the down arrow on the left side.

   The drive list displays:

   - **Drive** – The drive number. Drives are numbered starting with one from the physical bottom of the library to the top.
   - **Type** – The drive form factor (half height or full height) and interface
   - **Firmware** – The current drive firmware version
   - **Serial** – The drive serial number
   - **Unit** – The module containing the tape drive
   - **Partition** – The logical library associated with the tape drive
2. Select the ticket to download.
   - **Current Ticket** – Pulls and saves a new support ticket from the drive.
   - **Last Unload Ticket** – Saves the ticket that was pulled automatically after the last cartridge was unloaded from the drive
3. Check the drive.
4. Click **Save**.

To download a library support ticket:

5. Expand the Library Support Ticket area, if necessary, by clicking the down arrow on the left side.
6. Click **Save**.

To download a drive support ticket:

1. Expand the **Library Support Ticket** list, if necessary, by clicking the down arrow on the left side.
2. Click **Save**.

4.7.10 Downloading Log and Trace Files

NOTE Users and Administrators should download support tickets instead of log and trace files because the support ticket will have complete information about each library event and is easier to read. See "**Downloading Support Tickets**".

To download the library log and trace files from the RMI, navigate to the **Maintenance > Logs and Traces > Download Logs and Traces** screen and then click **Save**.

4.7.11 Rebooting the Library

From the **Maintenance > System Reboot** screen, click **Reboot**.

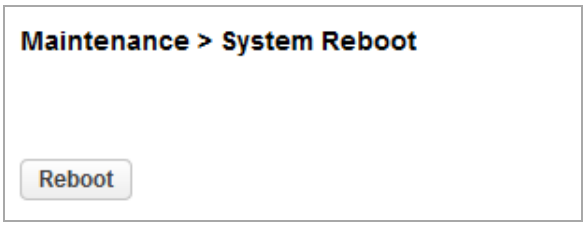

4.7.12 Controlling the UID LED

The UID LEDs are a pair of blue LEDs — one on the OCP and the other on the base module controller. The UID LEDs are useful for identifying the library in a data center. The UID LEDs are operated synchronously and controlled by the user. From the **Maintenance > UID LED Control** screen you can see whether the LEDs are lit, and toggle the status.

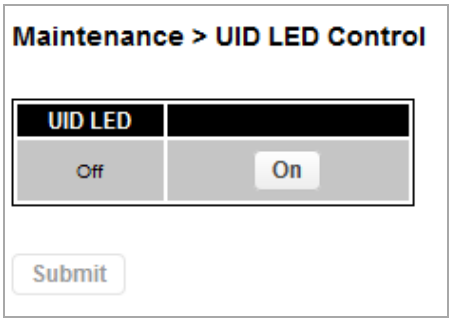

4.7.13 Moving the Robotic to the Base Library Module

Before extending a module from the rack, the robotic assembly must return to its park position in the base library module. Under normal circumstances, when the library is powered off using the front power button the robot automatically parks and locks into the base module behind the OCP. After powering off the library and before proceeding with extending a module from the rack, look inside the base module window to verify that the robotic assembly is behind the OCP.

If the library did not move the robotic assembly to its park position, you can do so from the **Maintenance > Move Robotic to Base Library** screen.

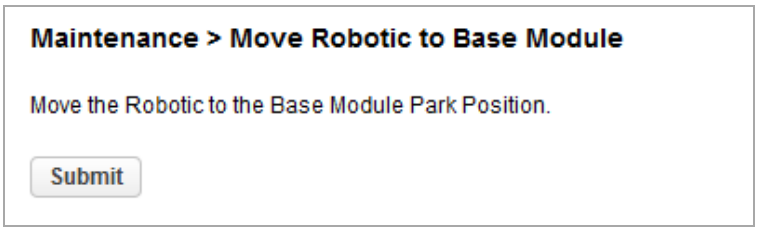

4.8 Operating the Library

Click or tap the **Operations** button on the Home screen to access the operations features.

4.8.1 Moving Media

From the **Operation > Move Media** screen you can move a tape cartridge located in a source element to an available destination element within the same partition.

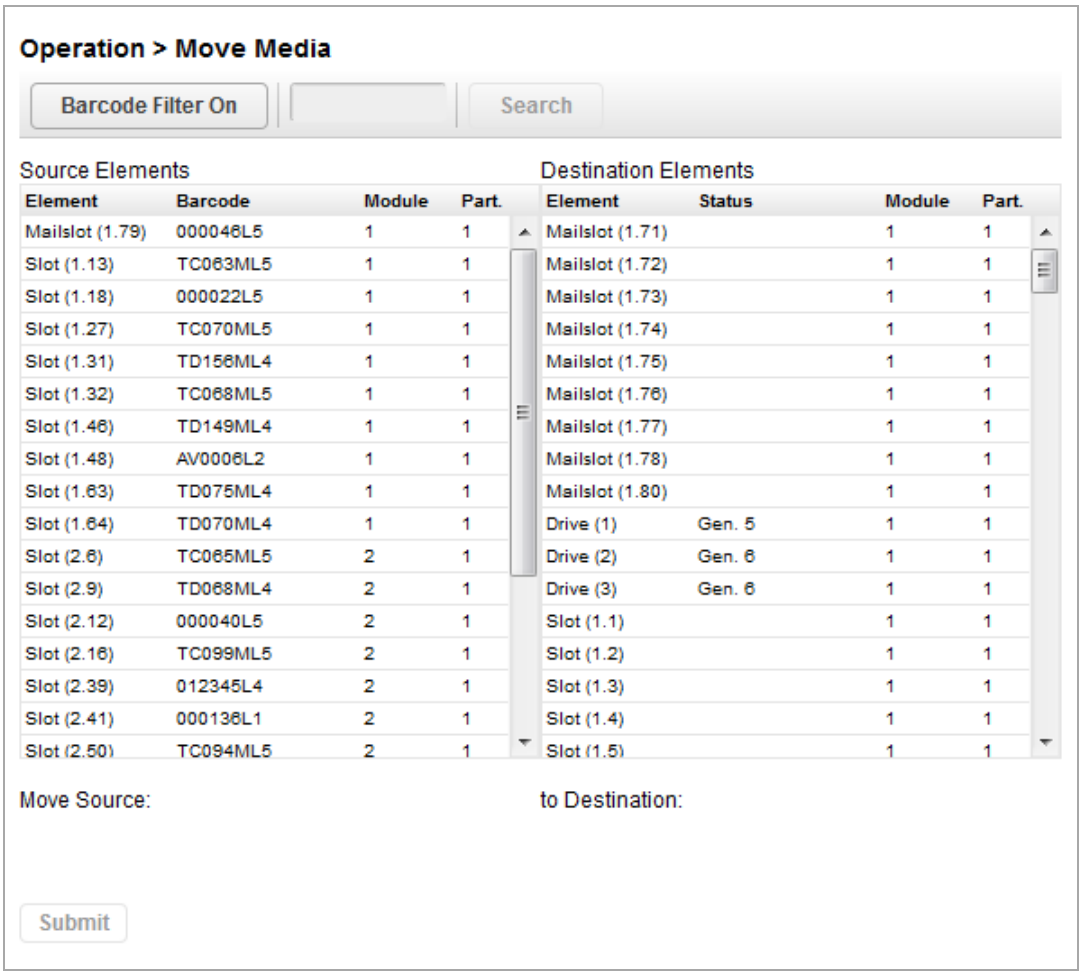

Element	Barcode	Module	Part.
Mailslot (1.79)	000046L5	1	1
Slot (1.13)	TC063ML5	1	1
Slot (1.18)	000022L5	1	1
Slot (1.27)	TC070ML5	1	1
Slot (1.31)	TD156ML4	1	1
Slot (1.32)	TC068ML5	1	1
Slot (1.46)	TD149ML4	1	1
Slot (1.48)	AV0006L2	1	1
Slot (1.63)	TD075ML4	1	1
Slot (1.64)	TD070ML4	1	1
Slot (2.6)	TC065ML5	2	1
Slot (2.9)	TD068ML4	2	1
Slot (2.12)	000040L5	2	1
Slot (2.16)	TC099ML5	2	1
Slot (2.39)	012345L4	2	1
Slot (2.41)	000136L1	2	1
Slot (2.50)	TC094ML5	2	1

Element	Status	Module	Part.
Mailslot (1.71)		1	1
Mailslot (1.72)		1	1
Mailslot (1.73)		1	1
Mailslot (1.74)		1	1
Mailslot (1.75)		1	1
Mailslot (1.76)		1	1
Mailslot (1.77)		1	1
Mailslot (1.78)		1	1
Mailslot (1.80)		1	1
Drive (1)	Gen. 5	1	1
Drive (2)	Gen. 6	1	1
Drive (3)	Gen. 6	1	1
Slot (1.1)		1	1
Slot (1.2)		1	1
Slot (1.3)		1	1
Slot (1.4)		1	1
Slot (1.5)		1	1

- **Source Elements** – Tape drives, enabled mailslots, and storage slots that contain a tape cartridge
- **Destination Elements** – Tape drives, enabled mailslots, and storage slots that do not contain a tape cartridge

Tape drives are listed at the top of each element list and listed in the order of their drive numbers.

Tape drives are numbered from the physical top of the library starting with Drive (1).

Slots are listed in the order of the slot numbers. Slots are numbered *m.s*, where *m* is the module number and *s* is the slot within the module.

© Copyright QUALSTAR 2016

4.8.1.1 Filtering Based on Barcode

To see a subset of the cartridges in the library, enter some or all of the barcode label characters in the search area and click **Search**. The **Source Element** list updates to display only the cartridges with labels that include the characters in the search box.

To perform a different search or display all of the available cartridges, click **Barcode Filter Off**.

4.8.1.2 Moving a Cartridge

1. Select the cartridge from **Source Elements**.
2. Select the destination location from **Destination Elements**.
3. Click **Submit**.

4.8.2 Opening the Mailslot

From the **Operation > Open Mailslot** screen you can see the status and unlock any enabled mailslot in the library.

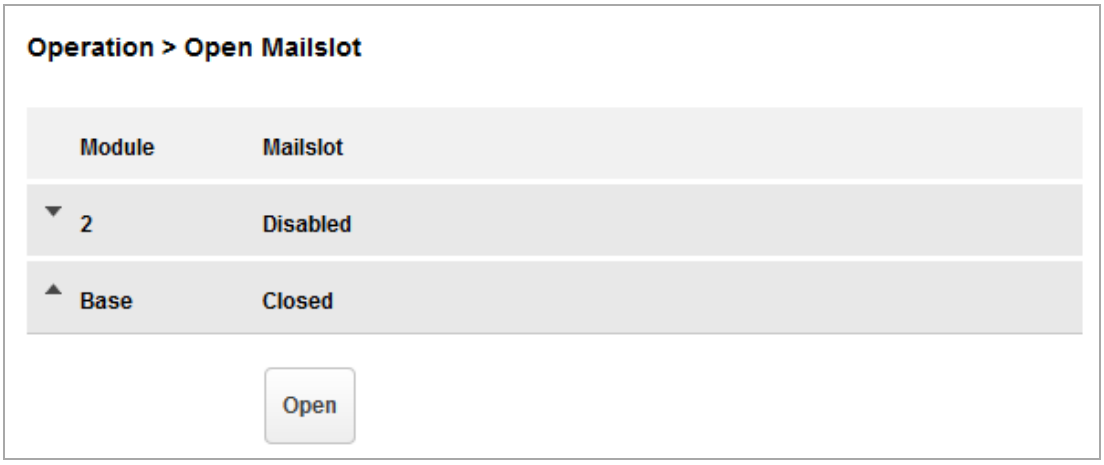

To open a mailslot, click **Unlock** for the appropriate mailslot and then click **Submit**. The library will release the lock. You can then pull the mailslot out of the library to access the mailslot.

NOTE The mailslot will relock after 30 seconds.

The mailslot must be enabled before it can be opened. To enable a mailslot, see "**Enabling or Disabling Mailslots**".

WARNING Hazardous moving parts exist inside this product. Do not insert tools or any portion of your body into the interior of the library through the mailslot safety door.

4.8.3 Opening a Magazine

From the **Operation > Open Magazine** screen you can unlock any magazine or enabled mailslot in the library.

To unlock a magazine, click **Open** for the magazine. The library will release the lock. You can then open the door and pull the magazine out of the library to access the storage slots.

NOTE

- Opening a magazine will take the library off-line.
- The magazines will relock after 30 seconds.

4.8.4 Cleaning a Tape Drive

From the **Operation > Clean Drive** screen you can initiate a drive cleaning operation.

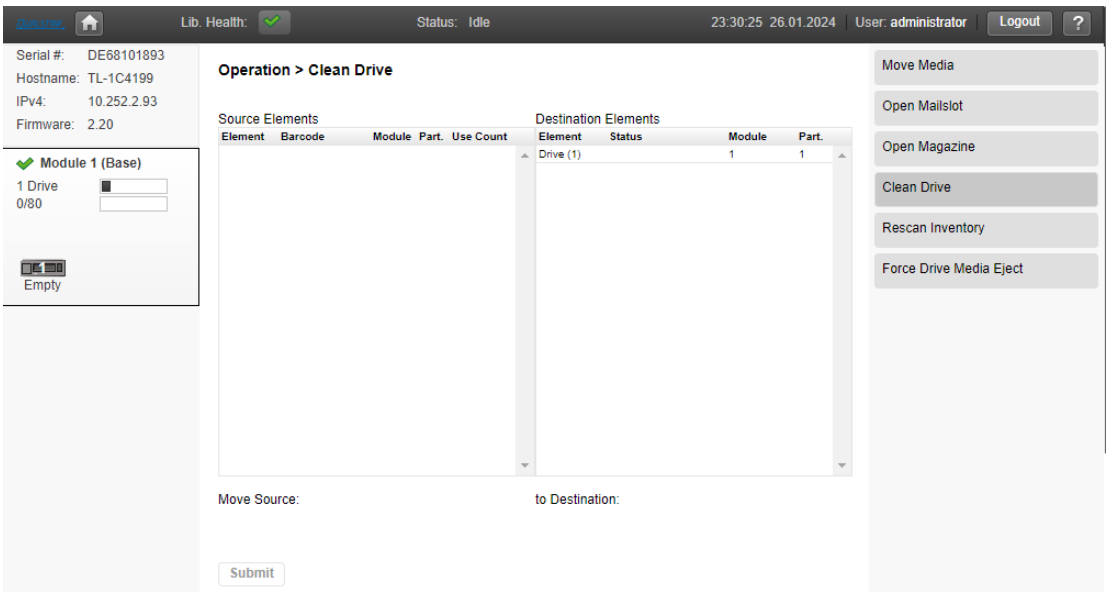

1. Select a cleaning cartridge from the **Source Elements** list. The library uses the barcode label to identify cleaning cartridges.

   If no cleaning cartridges are available, load one into a mailslot or magazine slot.
2. Select the tape drive to be cleaned from the **Destination Elements** list.

   Tape drives currently containing a cartridge are not listed. To clean a tape drive not listed, move the cartridge out of the drive.
3. Click **Submit**

4.8.5 Rescanning the Cartridge Inventory

To have the library rescan the cartridges, navigate to the **Operation > Rescan** screen and click **Rescan**. The library will change to Scanning status and will be unavailable to perform other operations until the scan is complete.

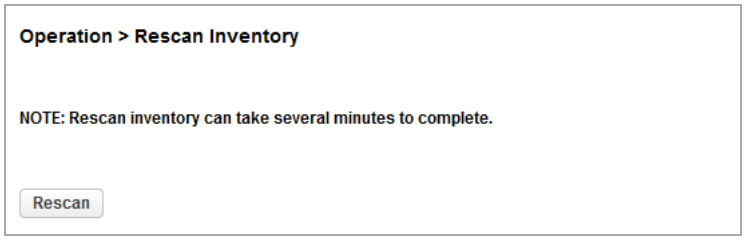

4.8.6 Forcing a Drive to Eject a Cartridge

The force drive media eject operation attempts to force a tape drive to eject a stuck cartridge and place it into an open slot. Access to this feature requires the administrator password.

Before performing this option, Qualstar recommends that you attempt to eject the tape using the backup software or library move media operation. While a drive is being force ejected, a window indicating the process is ongoing should appear. No operations will be available until the force eject completes.

NOTE If the drive has difficulty ejecting the cartridge, the media is possibly bad or damaged.

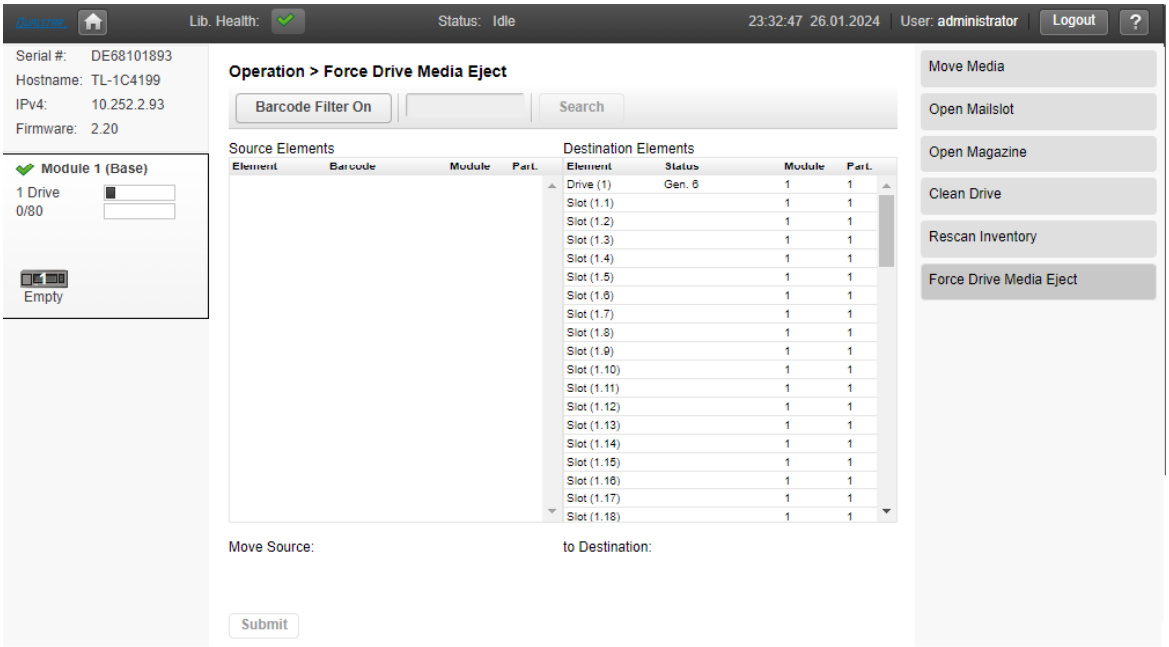

1. Navigate to the **Operation > Force Drive Media Eject** screen.
2. Select the drive in the **Source Elements** list.
3. Select the destination in the **Destination Elements** list.
4. Click **Submit**.

4.9 Viewing Status Information

To access the status area, from the Home screen, click or tap **Status**.

4.9.1 Viewing Library and Module Status

Summary information and status is displayed in the top banner and left side bar. For additional library module configuration and status information navigate to the **Status > Library Status** screen.

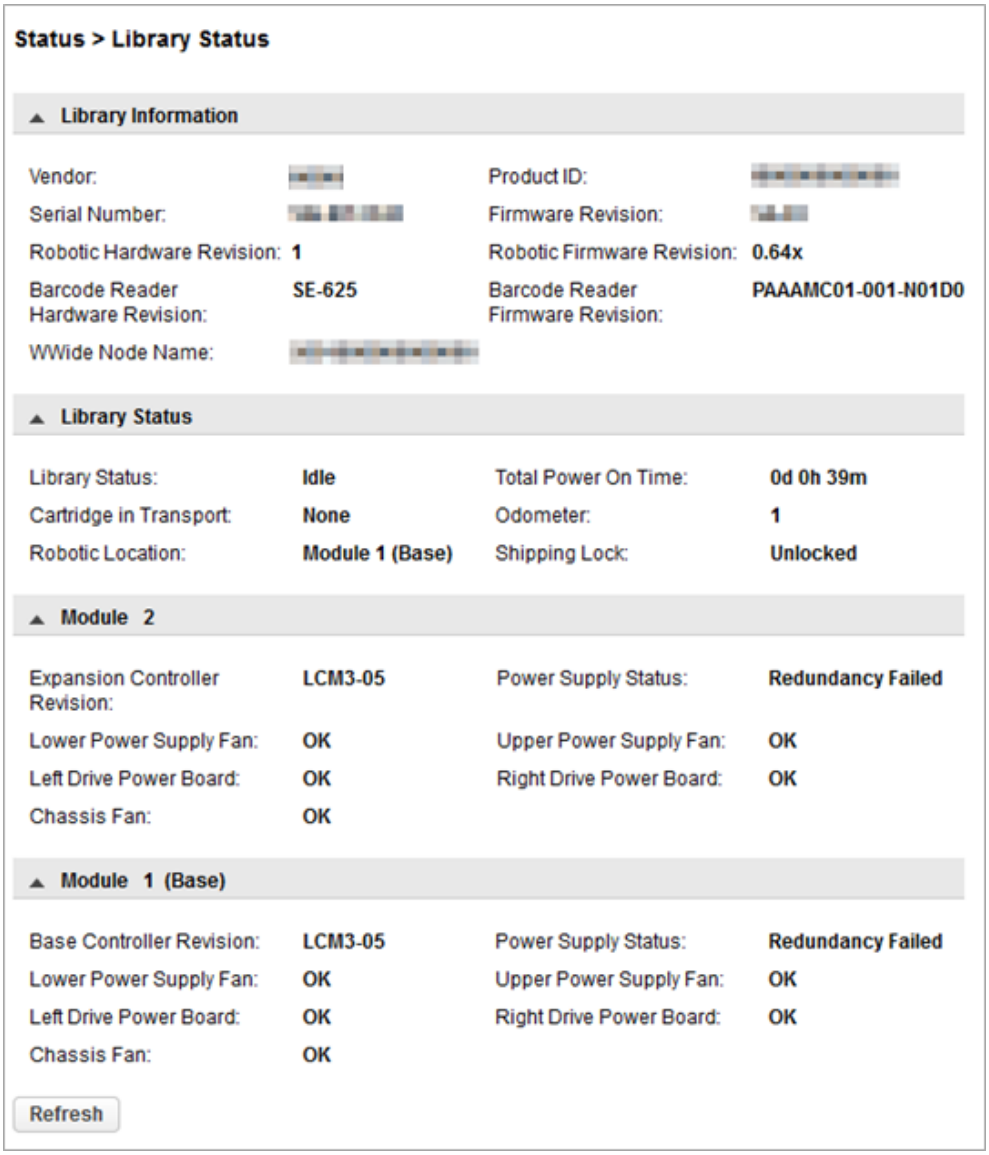

Library information

- **Vendor** – Always QUALSTAR
- **Serial Number** – Library serial number
- **Robotic Hardware Revision**
- **Barcode Reader Hardware Revision**

- **WWide Node Name** – A worldwide unique identifier that the library reports over SCSI and can be used by operating systems or software applications to identify and track the library.
- **Product ID** – Always Q80
- **Firmware Revision** – Version of the currently installed library firmware
- **Robotic Firmware Revision** – Version of the currently installed robotic assembly firmware. The robotic assembly firmware is bundled and installed with the library firmware.
- **Barcode** Reader Firmware Revision – Version of the currently installed barcode reader firmware. The barcode reader firmware is bundled and installed with the library firmware.

Library Status

- **Library Status**
  - **Idle** – The library robotic is ready to perform an action.
  - **Moving** – The library robotic is moving a cartridge.
  - **Scanning** – The library robotic is performing an inventory of cartridges.
  - **Offline** – The library robotic has been taken off line by the library.
- **Cartridge in Transport** – When applicable, displays the barcode label of the cartridge currently in the robotic assembly
- **Total Power On Time** – Total time that the base module has been powered on since it was manufactured
- **Odometer** – Robotic assembly move count

Module status

- **Base Controller Revision or Module Controller Revision** – Hardware revision of the controller board currently installed in the module.
- **Left Drive Power Board Status** – Status of the drive power board (DC-DC converter) for the top three half-height drive slots in the module.
- **Right Drive Power Board Status** – Status of the drive power board (DC-DC converter) for the lower three half-height drive slots in the module.
- **Power Supply Status** – Displays the status of power redundancy.

© Copyright QUALSTAR 2016

4.9.2 Using Inventory Lists

The inventory lists display each of the elements, such as slots and tape drives, with information about the cartridge stored in the element. To see the elements organized by module, from **Status**, navigate to **Cartridge Inventory→List View**. To see the elements organized by logical library or partition, from **Status**, navigate to **Partition map→List View**.

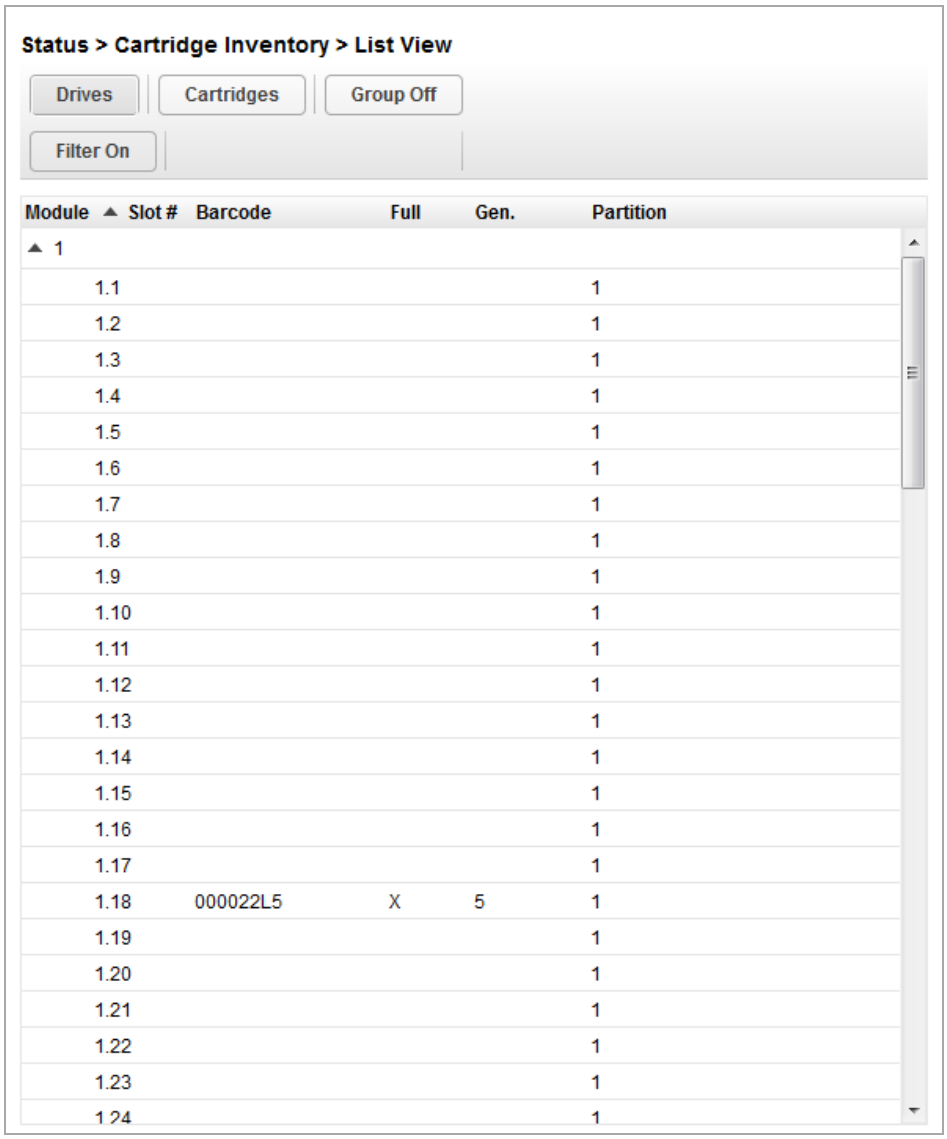

Module	Slot #	Barcode	Full	Gen.	Partition
1					
	1.1				1
	1.2				1
	1.3				1
	1.4				1
	1.5				1
	1.6				1
	1.7				1
	1.8				1
	1.9				1
	1.10				1
	1.11				1
	1.12				1
	1.13				1
	1.14				1
	1.15				1
	1.16				1
	1.17				1
	1.18	000022L5	X	5	1
	1.19				1
	1.20				1
	1.21				1
	1.22				1
	1.23				1
	1.24				1

In the Inventory List you can see:

- **Module** – The module number
- **Slot #** – The slot number in the form <module>.<slot>, where module is the module number and slot is the slot number
- **Label** – Barcode label
- **Full** – X if a cartridge is using the element
- **Gen** – LTO generation of the cartridge
- **Partition** – The partition number

4.9.2.1 Filtering by Barcode Label

To filter the list based on barcode label, enter characters in the filter box and then click **Search**.

1. Click **Filter On**.

   The search box is displayed.

2. Enter characters into the search box and then click **Search**.

   The characters can be anywhere in the barcode label. The search characters are not case sensitive. There are no wildcards.

To disable filtering, click **Filter Off**.

4.9.2.2 Listing Just Drives or Cartridges

To limit the list to tape drives, click **Drives**.

To limit the list to cartridges, click **Cartridges**.

To see all elements, click **Partition** or **Slots**.

4.9.2.3 Viewing Elements by Group

When the list is grouped, you can expand or contract the list for each group by clicking the triangle next to the number in the first column. Grouping is enabled by default.

To disable grouping, click **Group Off**.

To enable grouping, click **Group On**.

4.9.3 Viewing Drive Status

In the **Status> Drive Status** screen you can see the configuration and status of each drive installed in the library.

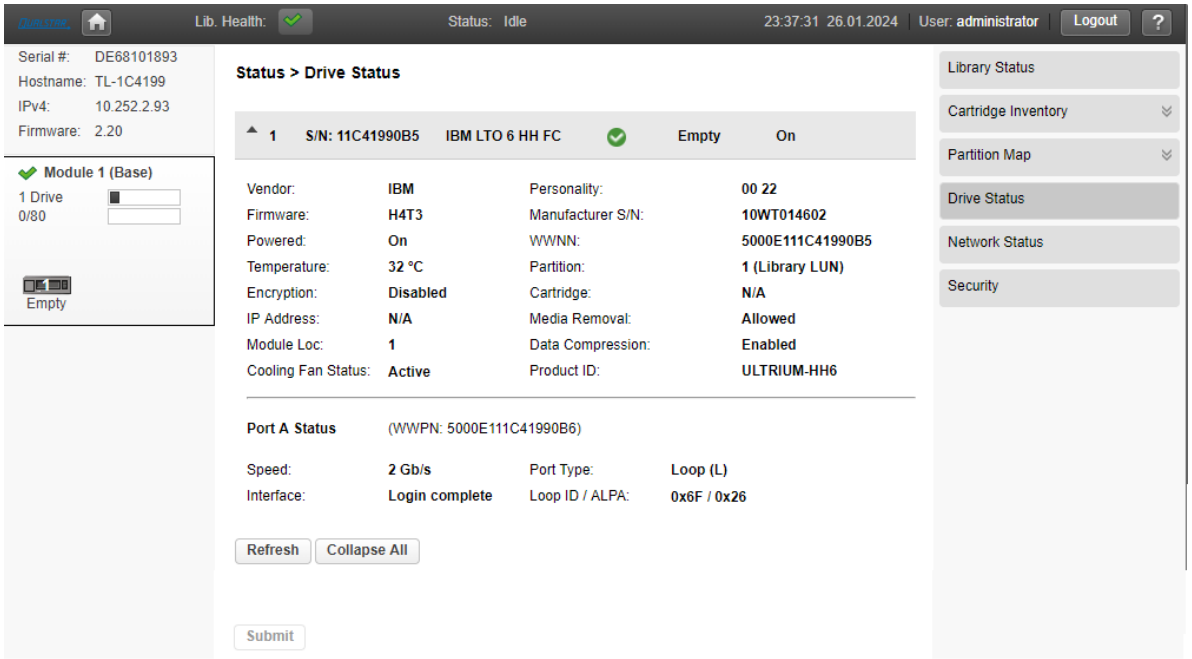

4.9.4 Viewing Network Status

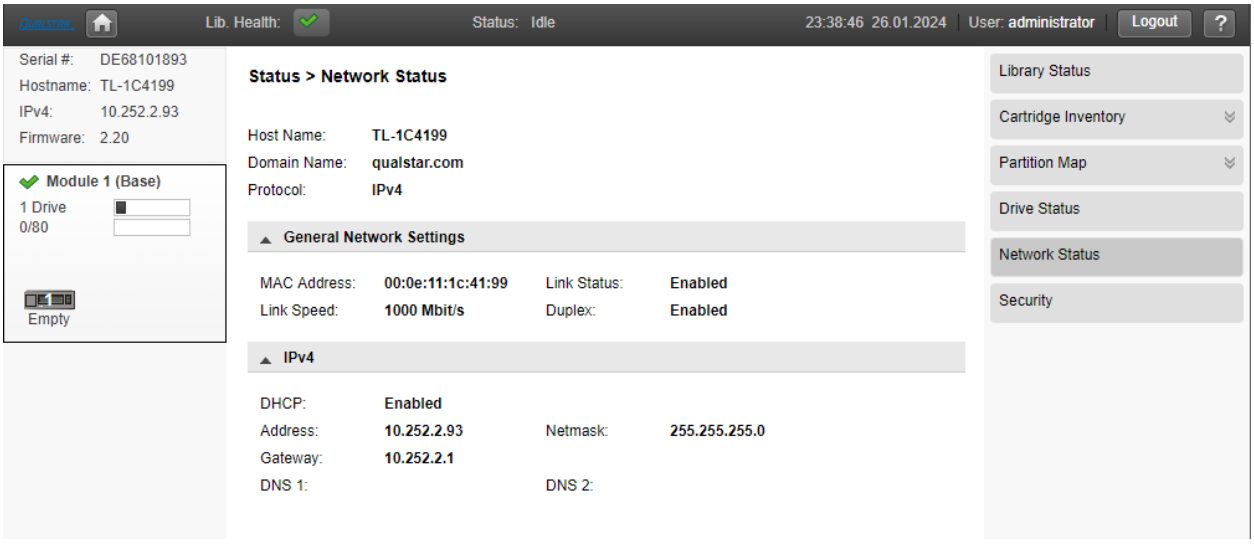

In the **Status > Network** screen you can see:

- **Host Name** – Library hostname
- **Domain Name**
- **Protocol** – IPV4 or IPv6
- **MAC Address** – A unique identifier for the library controller network interface
- **Link Status** – Enabled or disabled
- **Link Speed** – Speed of the Ethernet connection to the library
- **Duplex** – Enabled or disabled

IPv4 settings

- **DHCP** – When Enabled, the library requests an IP address from a DHCP server each time the library is powered on.
- **Address** – IP address in use by the library. If DHCP is enabled, this address was obtained from the DHCP server. When DHCP is not enabled, the address was configured.
- **Netmask** – The network mask of the library controller used when DHCP is not enabled.
- **Gateway** – The gateway used when DHCP is not enabled.
- **DNS 1**
- **DNS 2**

IPv6 settings

- **Stateless Addressing** – When Enabled, the device will generate an address for itself based on the routing information obtained from a router advertisement and the MAC address. The device can manage up to five global addresses at the same time, which can be assigned from different routers.
- **Static Addressing** – When Enabled, the library will use a statically-configured address.
- **Static Assigned Address** – The IPv6 address when Static Addressing Enabled is On.

© Copyright QUALSTAR 2016

5 Upgrading and Servicing the Library

5.1 Tools Required

- #2 Phillips Screwdriver – securing or removing the round-hole rack adapter bracket, securing retention inserts in square-hole racks
- Small Flat Head or Torx Screwdriver – retracting the locking screen when moving a library cover, using the magazine manual release
- T10 Torx Screwdriver – removing drive bay covers
- Small Flat Head Screwdriver – removing a magazine access door
- Clip Nut Installation Tool – inserting or removing clip nuts in square-hole racks while installing or removing rack rails

5.2 Identifying a Failed Component

Using the OCP or RMI:

1. Activate the UID (Unit Identification) LEDs from the **Maintenance→UID LED Control** screen. This will illuminate the blue LED on the front and rear of the base module to identify the library containing the failed component.
2. Identify the module within the library that contains the failed component:
   a. In the upper left corner of the Home screen, locate the module that indicates an error.
   b. Click or tap the module for information on the failed component.

NOTE If dealing with a failed drive power board, there are two drive power boards in each module; the screen will indicate whether the left or right drive power board (as seen from the rear of the library) has failed. On the failed board itself, the amber LED might be illuminated and visible through the fan grating.

5.3 Installing or Replacing a Tape Drive

WARNING Only individuals who are informed about the procedures and risks should replace or upgrade this tape drive assembly. Read all troubleshooting documentation and procedures before proceeding with repair or upgrade procedures. Hazardous moving parts exist inside this product. Do not insert tools or any portion of your body into the drive bay openings.

© Copyright QUALSTAR 2016

5.3.1 Removing a Tape Drive

If you are replacing a tape drive:

- Make sure the tape cartridge has been removed from the tape drive. Use the operator control panel (OCP) or the remote management interface (RMI) to move the cartridge to a storage slot or mailslot.
- If you are replacing the tape drive in a single drive unit or the master drive in a multi-drive unit, verify that backups are not occurring on the drive you are replacing. If backups are occurring on the master drive, verify that the autoloader or library will not be accessed through this drive while the drive is being replaced.

1. Use the OCP or RMI to power off the tape drive. See 4.5.8 for instructions on configuring tape drives.
2. Verify that the tape drive assembly LED is off, and then remove the FC or SAS cable from the tape drive.

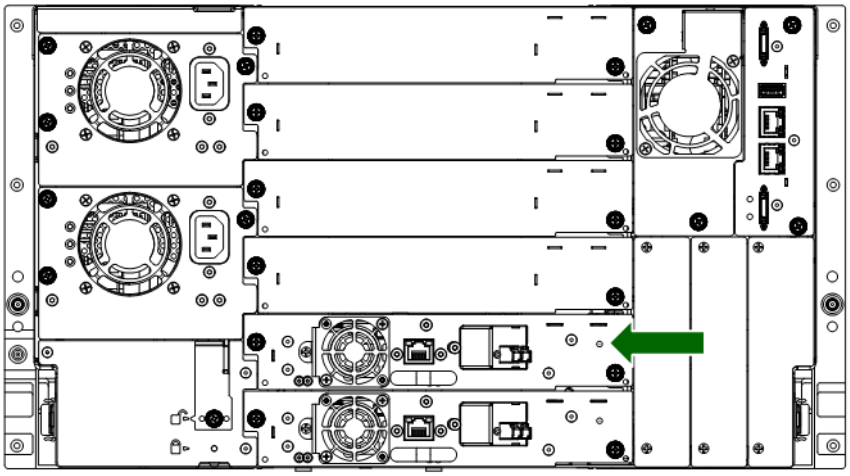

3. Loosen the blue captive thumbscrews on the tape drive. Pull straight back on the tape drive handle while supporting the bottom of the drive to remove it from the unit

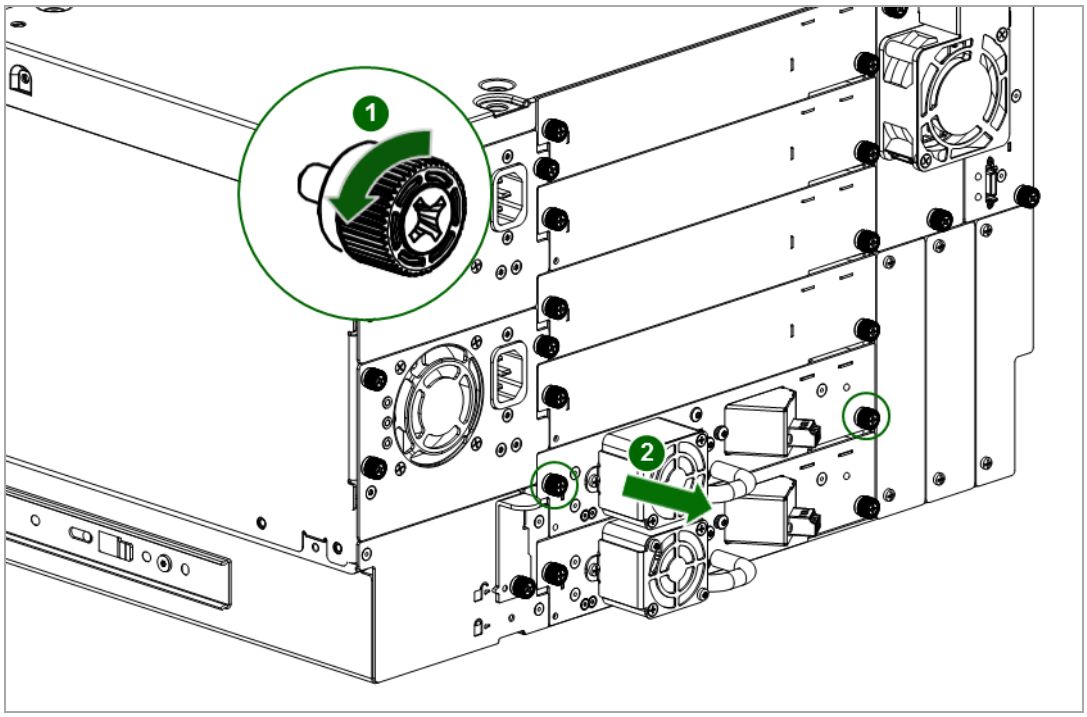

CAUTION Support the bottom of the tape drive when removing it to avoid damaging any of the internal connections.

5.3.2 Removing a Drive Bay Cover

If you are adding at tape drive:

1. Identify the location for the tape drive. If this is the first tape drive, install it in the bottom drive bay. Otherwise, install the new drive in the next higher drive location. Drives always install from bottom to top.
2. Using a Torx 10 screwdriver, remove one drive bay cover to install a half-height LTO drive.

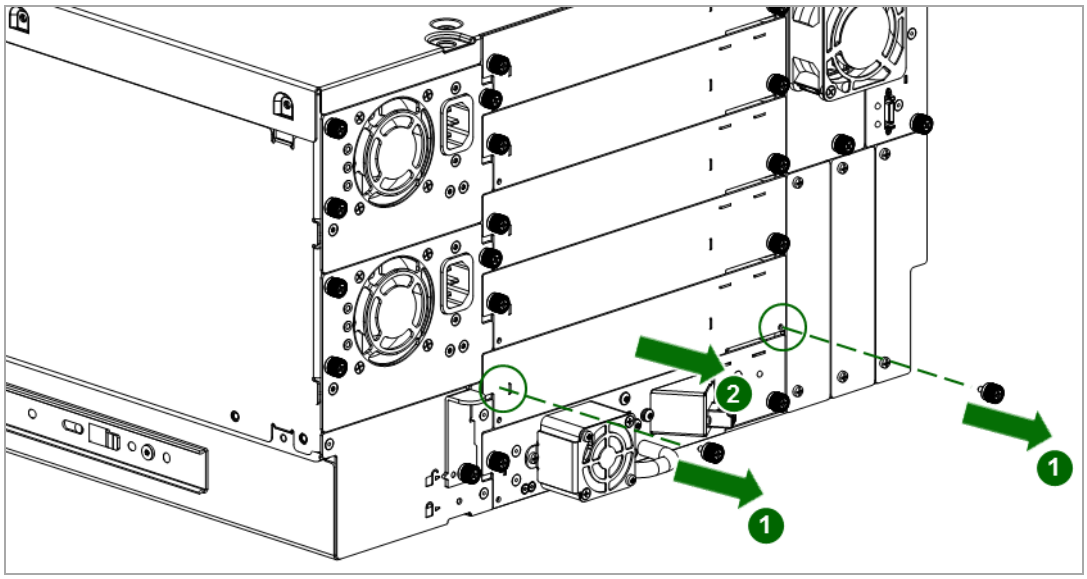

5.3.3 Installing a Tape Drive

1. Align and slowly insert the new tape drive into the drive bay while supporting the drive assembly. The tape drive should be flush with the back panel of the device.
2. Tighten the captive thumbscrews with your fingers until the tape drive is secure.

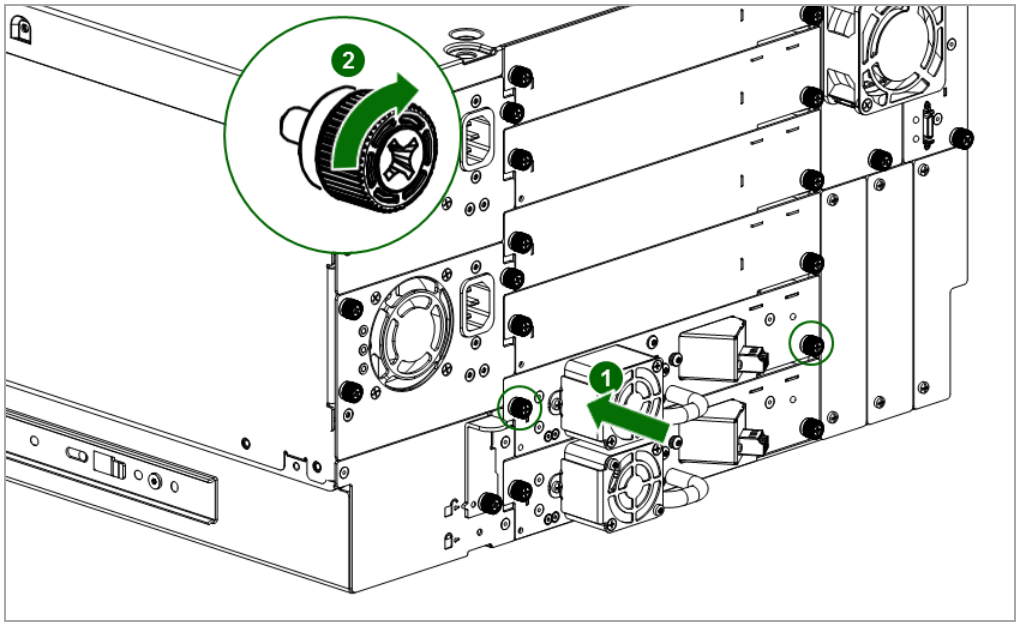

5.3.4 Connecting the SAS Cable

1. Attach the HBA end of the SAS cable into the connector on the HBA. If you are using a SAS fanout cable, the end of the cable with only one connector should be plugged into the HBA.
2. Connect the drive end of the cable.
   - If you are using a cable with a single connector on each end, attach the other end into the connector on the tape drive.
   - If you are using a SAS fanout cable, attach one mini-SAS connector into the connector on each tape drive. The unused ends of the SAS fanout cable are single channel and not suitable for use with disk arrays. Use the other ends to connect tape drives, or coil and secure them to the rack to minimize stress on the connectors.

NOTE Each of the tape drives uses one channel and the Qualstar fanout cable recommended for use with the library maps each of the four channels from the HBA to one channel on the drive end.

You can plug any of the four drive connectors into any tape drive.

TIP If you are not using a SAS cable specified for the library, do not force a SAS cable's mini-SAS connector into the tape drive mini-SAS connector because it might be keyed differently.

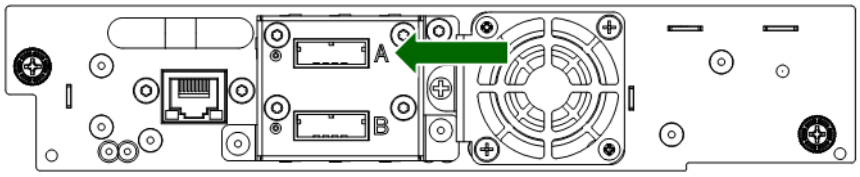

NOTE SAS signal rates require clean connections between the HBA and tape drive. Do not use adapters or converters between the HBA and the tape drive. For reliable operation, use a maximum SAS cable length of six meters.

5.3.5 Connecting the Fibre Channel Cables

1. Remove the FC port caps if necessary. Attach one end of the FC cable to port A on the tape drive.

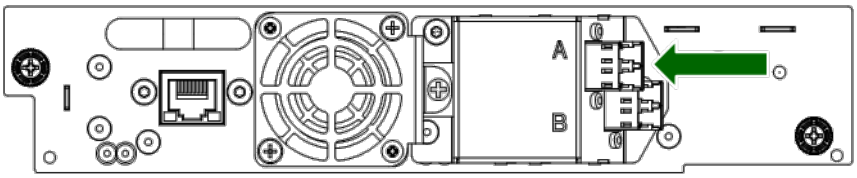

2. Attach the other end of the FC cable to a switch or HBA.

5.3.6 Configuring the FC Interface

If you are replacing an existing FC tape drive, skip this step.

It is recommended that you leave the FC port at the default settings of **Port Speed: Automatic** and **Port Type: Auto Detect**. With these settings, the tape drive will use the appropriate configuration.

5.3.7 Verifying the Installation

1. Power on the drive from the OCP or RMI, if necessary.
2. Confirm that the library recognizes the new tape drive by checking the OCP or RMI. The new drive should appear in the module status overview area on the left side of the screen.
3. Use the RMI or OCP to verify that the tape drive has the current firmware. Update the firmware if necessary.

© Copyright QUALSTAR 2016

5.4 Adding an Expansion Module

WARNING

Product Weight

Each Q80 module weighs more than 40 kg (88 lbs) without drives or tapes and more than 70 kg (144 lbs) with 6 tape drives and 80 tapes.

Risk of personal injury

Before moving or lifting a library:

- Observe local health and safety requirements and guidelines for manual material handling.
- Remove all tapes to reduce the weight and to prevent cartridges from falling into the robotics path and damaging the library.
- Remove all tape drives to reduce the weight.
- Obtain adequate assistance to lift and stabilize the library during installation or removal.

Risk of damage to devices

When placing a library into or removing the library from a rack:

- Extend the rack's levelling jacks to the floor.
- Ensure that the full weight of the rack rests on the levelling jacks.
- Install stabilizing feet on the rack.
- Extend only one rack component at a time.

CAUTION

Static Sensitive

Risk of damage to devices

- A discharge of static electricity damages static-sensitive devices or micro circuitry.
- Proper packaging and grounding techniques are necessary precautions to prevent damage.

5.4.1 Overview

To install this expansion module, you will:

1. Clear space in the rack, if necessary, and then install the rack rails.
2. Transfer the library top or bottom cover to the expansion module.
3. Install the expansion module in the rack and align the module with the library.
4. Plug in the cables and verify the installation.

You will need a small flat head or Torx screwdriver, a #2 Phillips screwdriver, and a clip nut installation tool.

© Copyright QUALSTAR 2016

5.4.2 Powering Off the Library

Power off the library from the front panel. Depress the power button and hold it for 3 seconds. If the library does not perform a soft shutdown, depress and hold the power button for 10 seconds.

Verify that the robotic assembly is in its parked position. Look inside the base module window to verify that the robotic assembly is behind the OCP.

Verify that all host processes are idle.

5.4.3 Moving a Cover to the New Module

The library has removable top and bottom covers. When adding a module, you must move either the top or the bottom cover to the new module. The two covers are identical and the process for removing and installing them is the same for the top and bottom of the module. See “Preparing the Top and Bottom Modules” for details; while this procedure refers to moving a cover from the base module, the information is the same for moving a cover from an expansion module.

5.4.4 Installing the Module in the Rack

1. Extend the middle rails until they lock into place. Move the sliding assembly to the front of the middle rails.

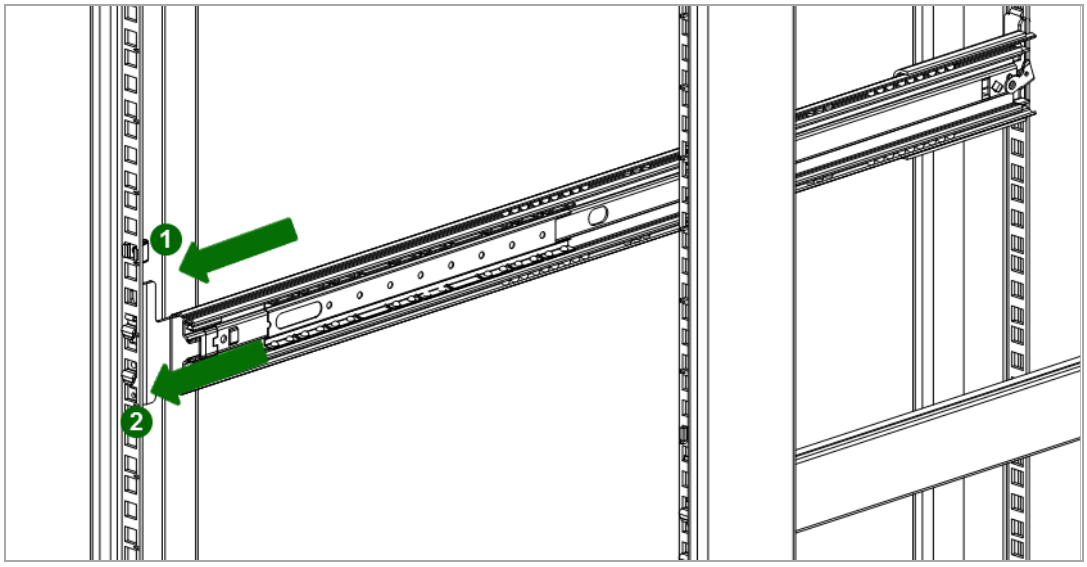

2. Slide the inner rails, which are attached to the module, into the middle rails. Slide the module into the rack.

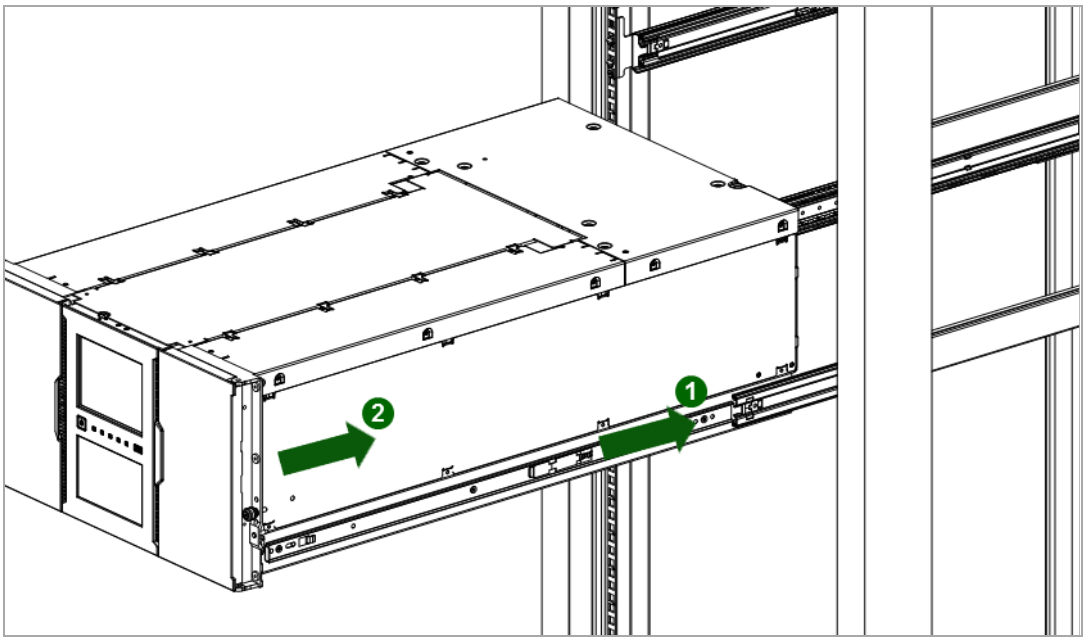

3. Verify that the expansion module has been installed directly above or below its adjacent module and is contained within the correct 6U volume. The gap between modules must be less than 4 mm.
4. Use your fingers to tighten the captive fastener on each side of the module. After the fasteners are snug, loosen them two full turns to allow adjustment room during the alignment process.

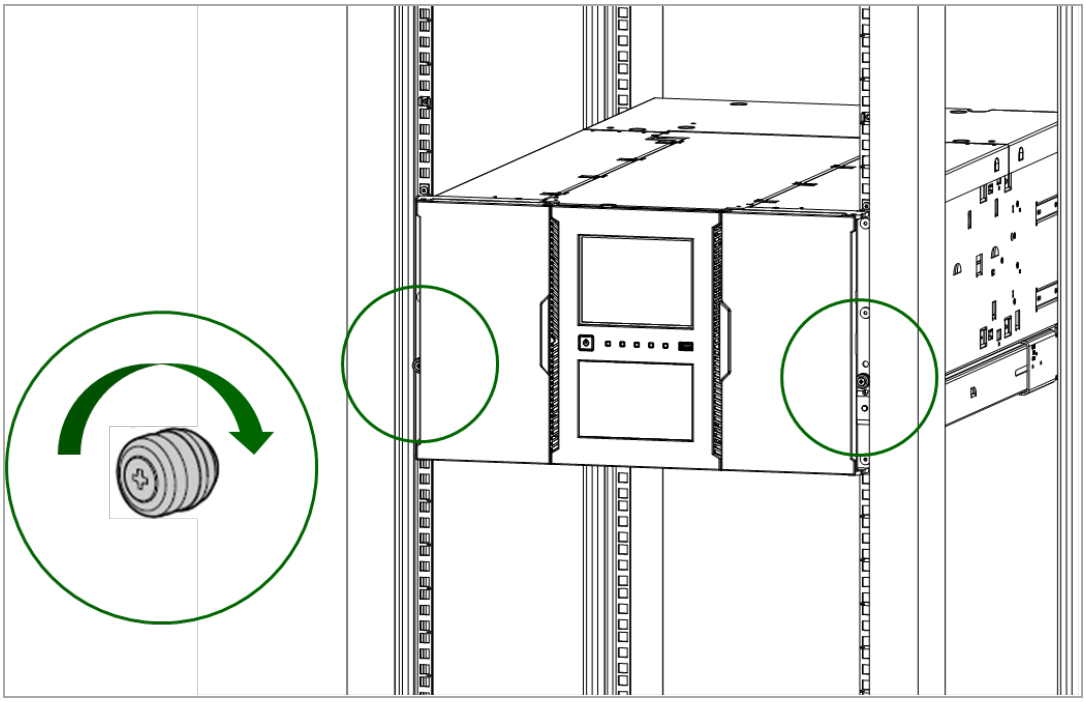

5.4.5 Aligning and Connecting the Module

Aligning the new module with the library ensures that the robot can move freely between the modules. The library will not operate unless the alignment mechanism is in the locked position. See "**Aligning and Connecting Modules**" for details.

5.4.6 Connect the Power Cords

Plug the power cords into the two power supplies in the new module.

TIP The module has dual redundant power supplies. To increase redundancy, plug each power cord into a different AC power circuit.

5.4.7 Verifying the Installation and Configuration

Verify that the library powers on and initializes correctly, and that the status is Ready. From the OCP or RMI, verify that the new module is visible.

Check the library configuration settings related to the additional storage slots, mailslots, and tape drives, and update if necessary.

The expansion module will operate using the existing library firmware. It is recommended that you always update the library to the latest firmware version.

You can update firmware from the RMI or OCP **Maintenance > Software Upgrades > System Firmware** screen.

5.5 Moving the Library

When moving a library module within the rack, to a different rack, or in a rack to a different physical location, care must be taken to avoid personal injury and damage to the module.

WARNING

Product Weight

Each Q80 module weighs more than 40 kg (88 lbs) without drives or tapes and more than 70 kg (144 lbs) with 6 tape drives and 80 tapes.

Risk of personal injury

Before moving or lifting a library:

- Observe local health and safety requirements and guidelines for manual material handling.
- Remove all tapes to reduce the weight and to prevent cartridges from falling into the robotics path and damaging the library.
- Remove all tape drives to reduce the weight.
- Obtain adequate assistance to lift and stabilize the library during installation or removal.

Risk of damage to devices

When placing a library into or removing the library from a rack:

- Extend the rack’s levelling jacks to the floor.
- Ensure that the full weight of the rack rests on the levelling jacks.
- Install stabilizing feet on the rack.
- Extend only one rack component at a time.

To move a module within a rack or into a different rack:

1. Save the library configuration.
2. Remove the tape cartridges from the tape drives and magazines, and power off the library.
3. Disconnect the power cords and cables, and unlock the alignment mechanisms.

CAUTION Failure to disconnect all cables can result to damage to the cable and/or the mating electronic assembly in the library.

4. Remove the modules from the rack.
5. Remove the rack rails from the rack.
6. Verify that the destination rack is level side to side and front to back.
7. Install the rack rails in the destination rack.
8. Install the modules in the rack.
9. Replace the cables and lock the alignment mechanisms.
10. Connect the power cords, power on the library, and verify the operation.
11. Replace the tape cartridges.

For instructions for these steps, see “**Replacing a Module**” and “**Installing the Library**”.

5.6 Replacing a Power Supply

CAUTION

Static Sensitive

Risk of damage to devices

- A discharge of static electricity damages static-sensitive devices or micro circuitry.
- Proper packaging and grounding techniques are necessary precautions to prevent damage.

5.6.1 Identifying the Failed Component

See the OCP or RMI Home screen to identify the failed component. Activate the UID LEDs from the **Maintenance > UID LED Control** screen to locate the library in the data center. For detailed instructions, see “**Identifying a Failed Component**”.

5.6.2 Preparing to Remove the Power Supply

1. Locate the failed power supply on the rear of the library by the LEDs; either the amber LED (2) will be lit or all three LEDs will be unlit.

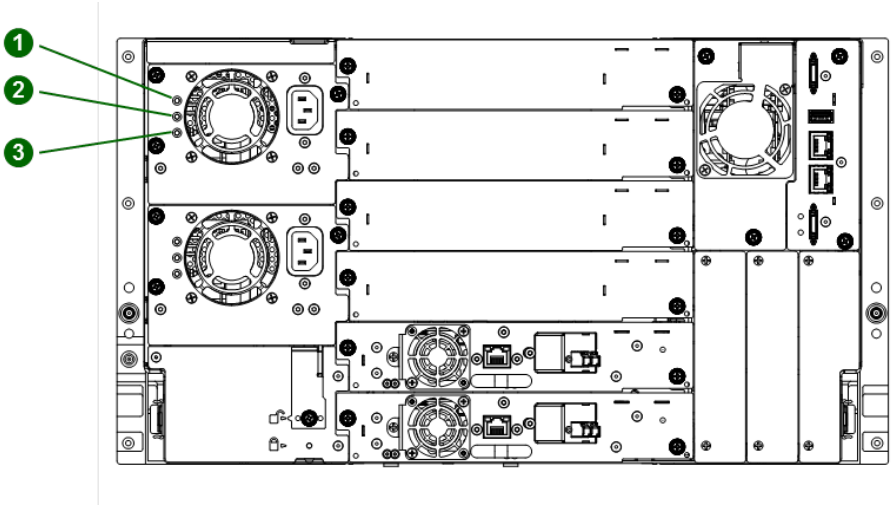

2. Unplug the AC power cord from the power supply you are replacing.

5.6.3 Removing the Power Supplies

1. Loosen the three blue captive thumbscrews with your fingers on the power supply.
2. Using the thumbscrews (one on each side), slowly pull the power supply approximately 10 cm (4 inches) from the back of the library.
3. Use one hand to completely remove the power supply from the module while using the other hand to support the bottom.

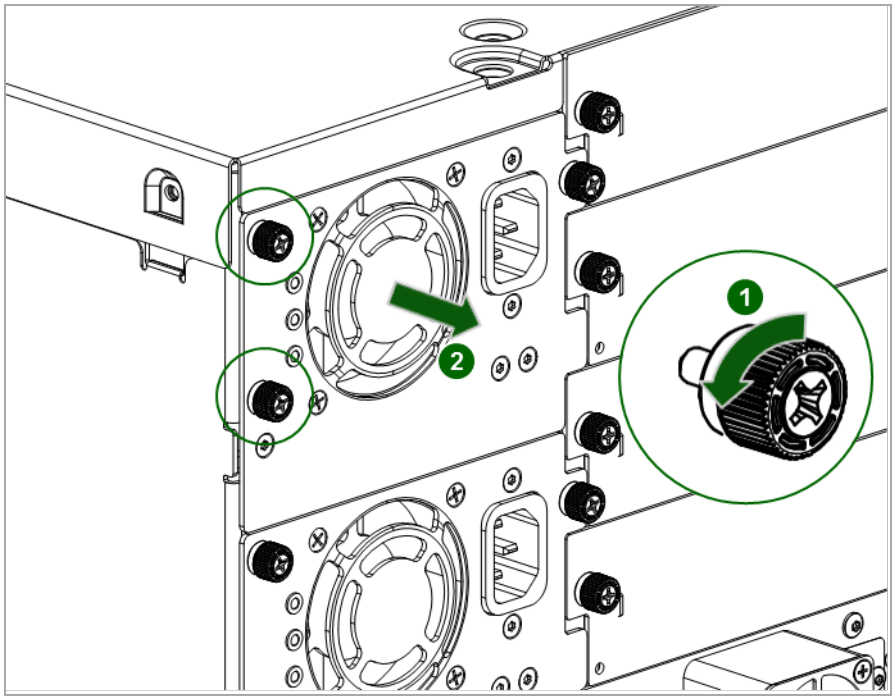

5.6.4 Installing the New Power Supply

1. Position the new power supply onto the alignment rails.
2. Slide the power supply into the library until it is flush with the back panel of the library.
3. Tighten the blue captive thumbscrews with your fingers to secure it to the library.
4. Attach the AC power cord to the new power supply.

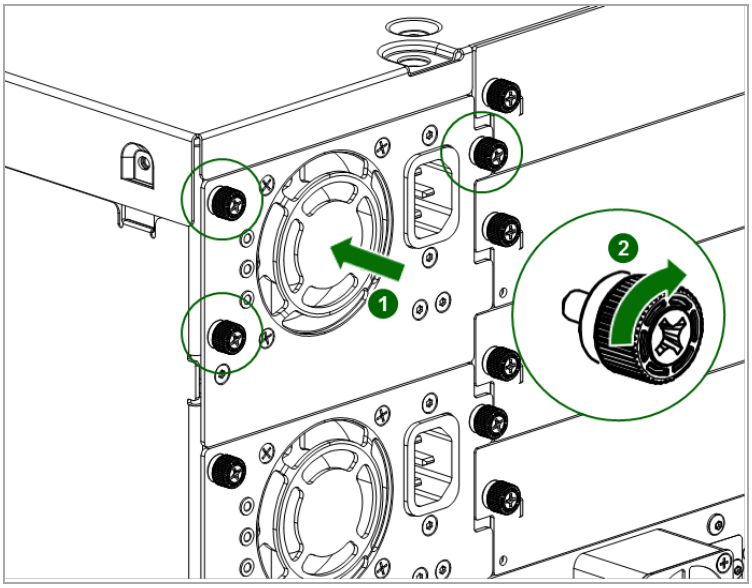

5.6.5 Verifying the Power Supply Installation and Operation

1. Verify that the new power supply is operating properly by checking the power supply LEDs:
   - The white (1) and green (3) LEDs should be lit.
   - The amber (2) LED should be unlit.

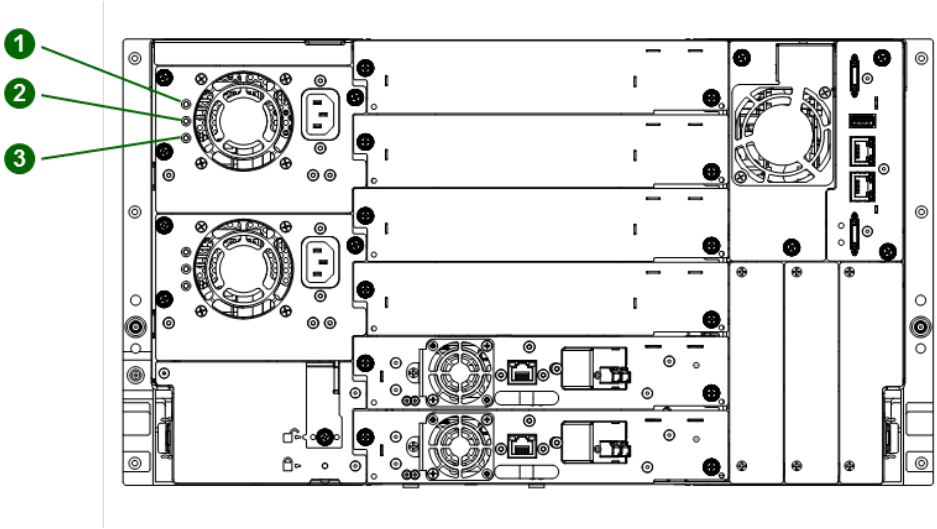

2. Using the OCP or RMI, confirm that the power supply is operating correctly; the event that indicated the power supply was faulty should be cleared.
3. If the UID LEDs are still illuminated, deactivate them using the OCP or RMI.

© Copyright QUALSTAR 2016

5.7 Replacing a Controller Board

5.7.1 Identifying the Failed Component

CAUTION

- Parts can be damaged by electrostatic discharge. Keep parts in electrostatic containers until needed. Ensure you are properly grounded when touching static sensitive components.
- You must power off the library to install or replace this part or damage may occur.

! Important

Do not replace both the base chassis and the base module controller with repair components in the same procedure. The firmware will not allow the library to operate if both components are replaced at the same time. The library WWID and serial number are saved in the controller and within the chassis. When one is replaced, the data from the original component is transferred to the repair component. If replacing both the base chassis and base module controller, you must power cycle the library between component replacements.

See the OCP or RMI Home screen to identify the failed component. Activate the UID LEDs from the **Maintenance > UID LED Control** screen to locate the library in the data center. For detailed instructions, see **"Identifying a Failed Component"**.

5.7.2 Saving the Configuration

The library configuration settings are on the library chassis and will be restored automatically when the controller is replaced. However, Qualstar recommends saving the configuration settings before removing the controller board. See **"Saving the Library Configuration to a File"** for instructions on saving configuration settings to a file or USB flash drive via the OCP or RMI.

5.7.3 Powering Off the Library

Power off the library from the front panel. Depress the power button and hold it for 3 seconds. If the library does not perform a soft shutdown, depress and hold the power button for 10 seconds.

Verify that the robotic assembly is in its parked position. Look inside the base module window to verify that the robotic assembly is behind the OCP.

Verify that all host processes are idle.

5.7.4 Preparing to Remove the Controller Board

1. Unplug the AC power cables from the module containing the failed controller.
2. On the module containing the failed controller, remove the expansion interconnect cables that connect to other modules, if present.
3. Remove the Ethernet cables and the USB device, if present. (An expansion module will not have Ethernet or USB ports.)

© Copyright QUALSTAR 2016

5.7.5 Removing the Base or Expansion Module Controller

1. Loosen the two blue captive thumbscrews on the controller.
2. Using the thumbscrews, slowly remove the controller from the library.

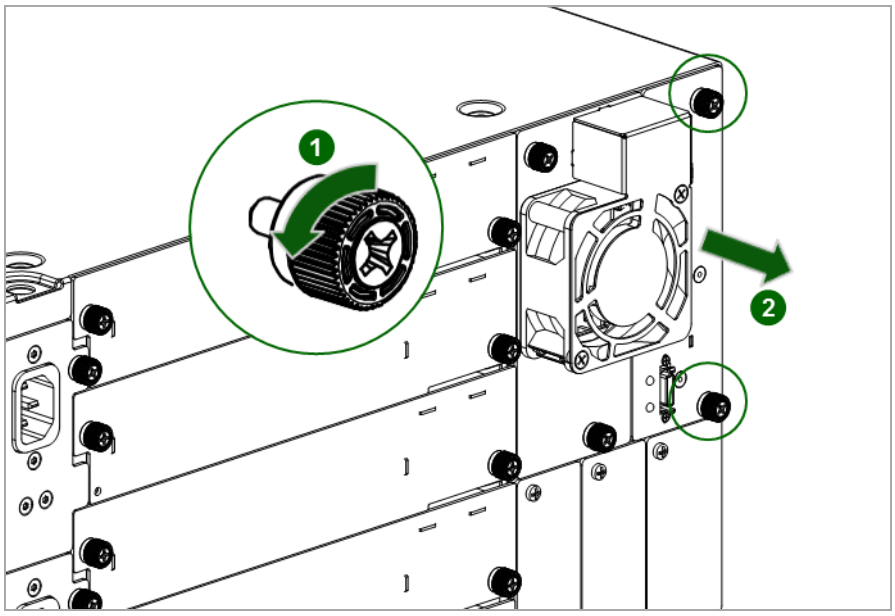

5.7.6 Installing the Base or Expansion Module Controller

1. Position the new controller on the alignment rails.
2. Slide the controller slowly into the library until it is flush with the back panel of the library.
3. Tighten the blue captive thumbscrews with your fingers to secure it to the library.
4. Replace the expansion interconnect cables, the Ethernet cable, and the USB device removed previously.
5. Plug in the AC power cables.

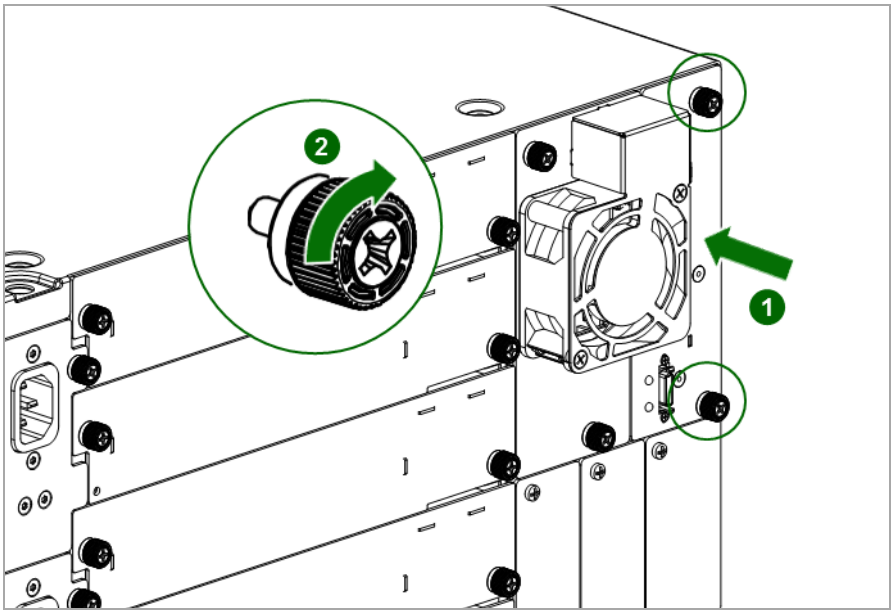

5.7.7 Verifying the base or expansion module controller installation

1. Using the OCP or RMI, click or tap **Status > Hardware Monitoring** to view the controller status.
2. Using the OCP or RMI, check for events; the event that indicated the controller was faulty should be cleared.
3. Verify that the library has the most up-to-date firmware revision. To find the version of firmware installed on the library, check the upper left corner of the OCP or RMI.

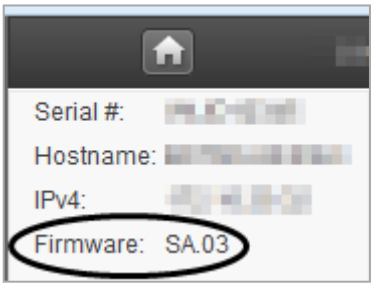

4. If replacing the base module controller, upgrade the firmware if necessary.

   Update the firmware from the **RMI Maintenance > Software Upgrades > System Firmware** screen.
5. If replacing the base module controller, restore the previous settings by restoring them from a file of saved settings, or by entering them using the OCP or RMI.

! IMPORTANT If you are asked whether or not to retain the serial number, always select Yes.

6. If the UID LEDs are still illuminated, deactivate them using the OCP or RMI.
7. Resume the host applications.

5.7.8 Powering On the Library

Power on the library by pressing the power button on the base module just below the OCP; the green light will illuminate. When the library is powered on, it inventories the tape cartridges in the magazines, checks the firmware version on all modules, configures the tape drives, confirms the presence of the existing modules, and searches for any new modules.

5.8 Replacing the Chassis Fan

CAUTION Parts can be damaged by electrostatic discharge. Keep parts in electrostatic containers until needed. Ensure you are properly grounded when touching static sensitive components.

5.8.1 Identifying the Failed Component

See the OCP or RMI Home screen to identify the failed component. Activate the UID LEDs from the **Maintenance > UID LED Control** screen to locate the library in the data center. For detailed instructions, see **"Identifying a Failed Component"**.

5.8.2 Removing the Chassis Fan Assembly

1. Loosen the two blue captive thumbscrews on the chassis fan assembly.
2. Using the thumbscrews, slowly remove the chassis fan assembly from the library.

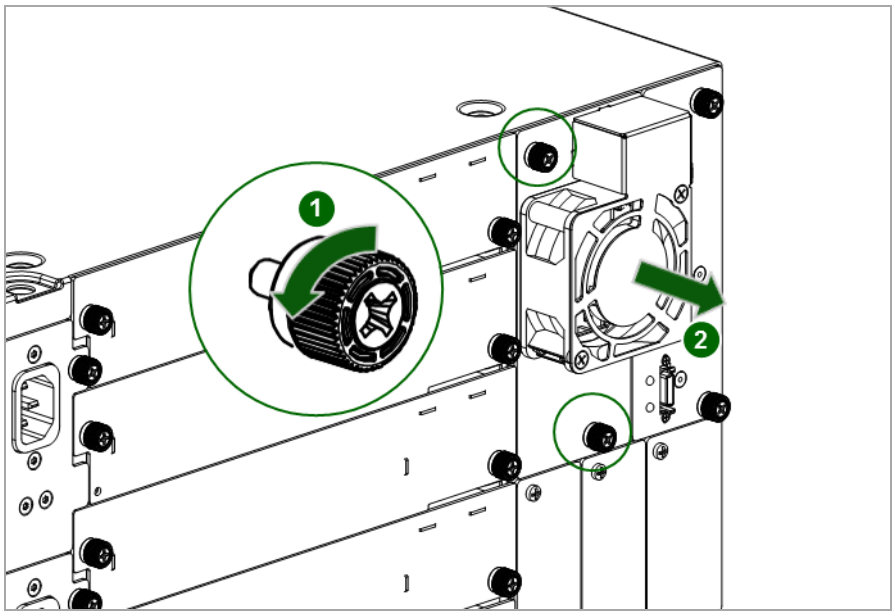

5.8.3 Installing the New Chassis Fan Assembly

1. Align the tabs on the library with the slots at the top of the chassis fan assembly.
2. Push in the chassis fan assembly until it is flush with the back panel of the library. Tighten the blue captive thumbscrews with your fingers to secure the assembly to the library.

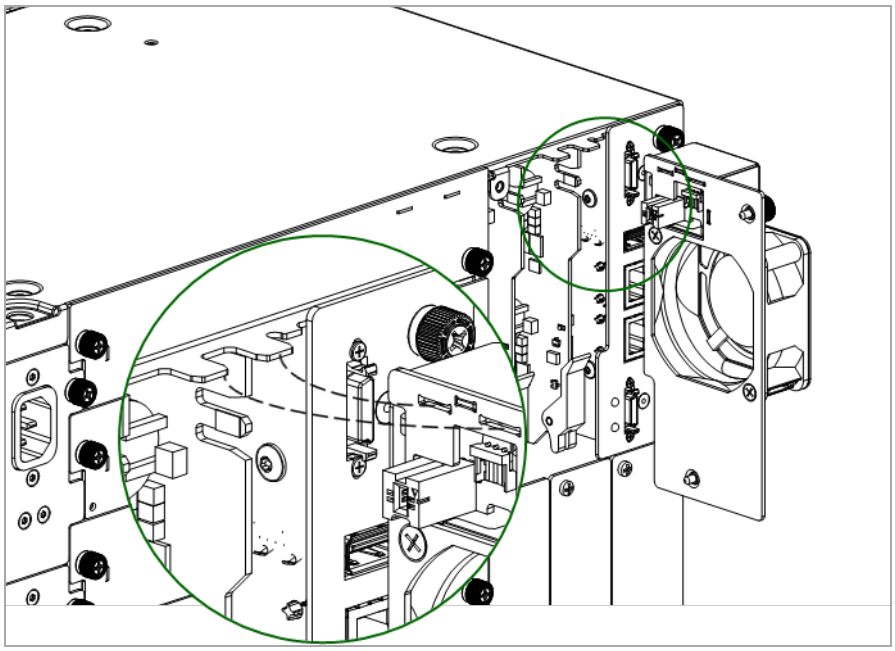

© Copyright QUALSTAR 2016

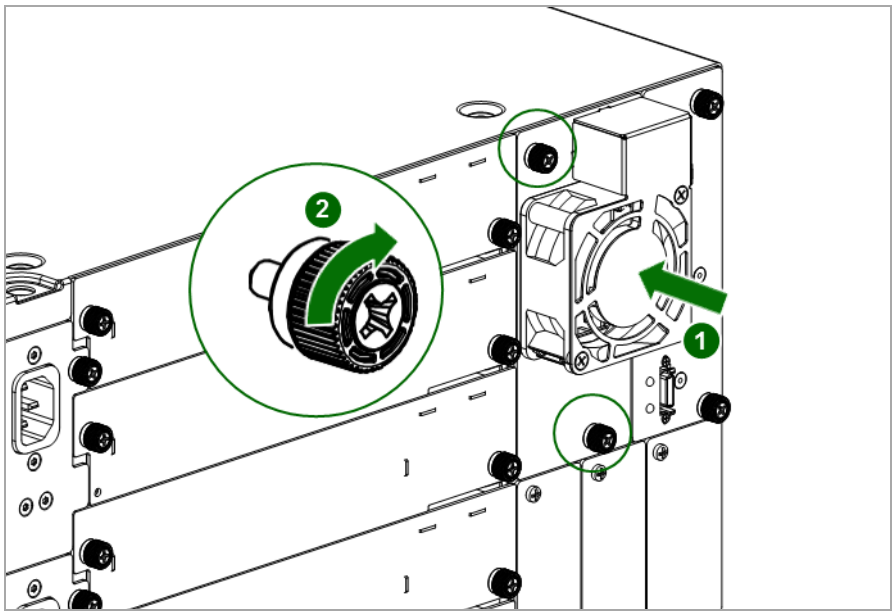

5.8.4 Verifying the Chassis Fan Assembly Installation

1. Verify that the new chassis fan assembly is installed properly by checking the OCP or RMI; the event that indicated the chassis fan assembly was faulty should be cleared.
2. If the UID LEDs are still illuminated, deactivate them using the OCP or RMI.

5.9 Replacing a Drive Power Board

	CAUTION	Parts can be damaged by electrostatic discharge. Keep parts in electrostatic containers until needed. Ensure you are properly grounded when touching static sensitive components.

5.9.1 Identifying the failed component

See the OCP or RMI Home screen to identify the failed component. Activate the UID LEDs from the **Maintenance > UID LED Control** screen to locate the library in the data center. For detailed instructions, see **"Identifying a Failed Component"**.

5.9.2 Powering off the library

Power off the library from the front panel. Depress the power button and hold it for 3 seconds. If the library does not perform a soft shutdown, depress and hold the power button for 10 seconds.

Verify that the robotic assembly is in its parked position. Look inside the base module window to verify that the robotic assembly is behind the OCP.

Verify that all host processes are idle.

5.9.3 Preparing to remove the drive power board

Unplug the AC power cords from the module containing the failed drive power board.

5.9.4 Removing the chassis fan assembly and drive power boards

1. Loosen the two blue captive thumbscrews on the chassis fan assembly.
2. Using the thumbscrews, slowly remove the chassis fan assembly from the library.

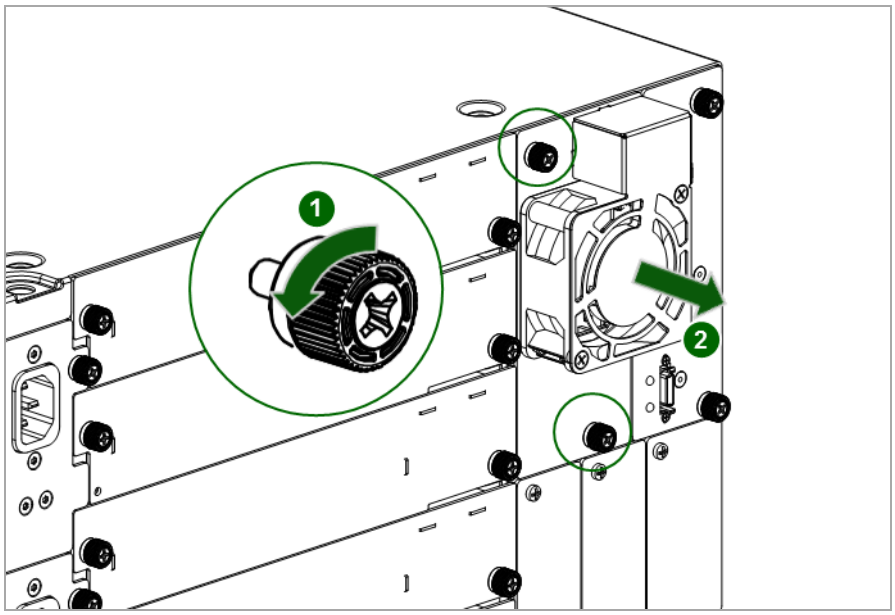

3. Slowly slide the drive power board out of the library.

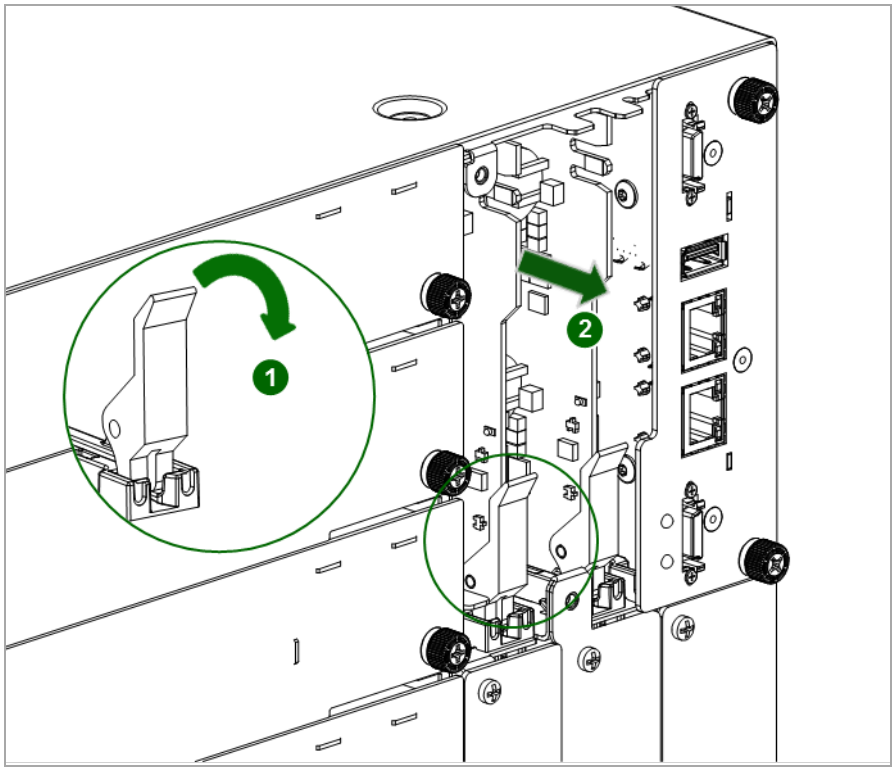

© Copyright QUALSTAR 2016

5.9.5 Installing the New Drive Power Board

1. Position the new drive power board onto the alignment rails.
2. Slide the drive power board into the library until seated firmly.
3. Push the latch up until it snaps into place; when the drive power board is installed correctly, the latch will not be loose.
4. Align the tabs on the library with the slots at the top of the chassis fan assembly.
5. Push in the chassis fan assembly until it is flush with the back panel of the library.
6. Tighten the blue captive thumbscrews with your fingers to secure it to the library.
7. Plug in the AC power cords disconnected previously.

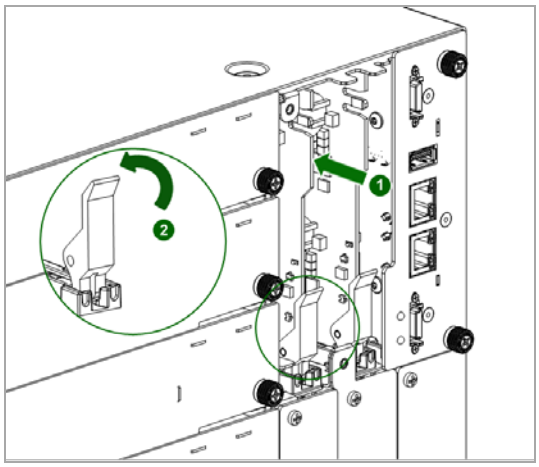

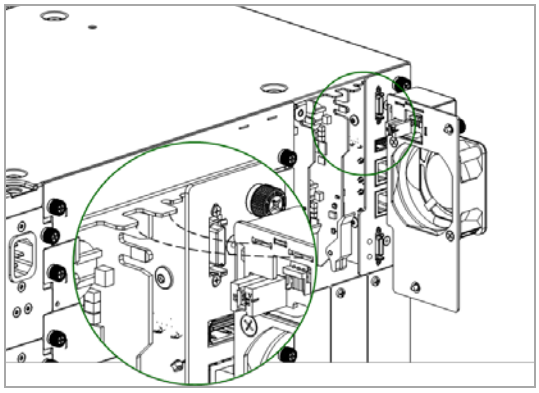

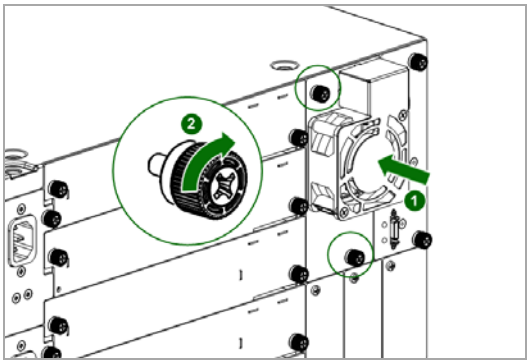

5.9.6 Powering On the Library

Power on the library by pressing the power button on the base module just below the OCP; the green light will illuminate. When the library is powered on, it inventories the tape cartridges in the magazines, checks the firmware version on all modules, configures the tape drives, confirms the presence of the existing modules, and searches for any new modules.

5.9.7 Verifying the Drive Power Board Installation

1. Verify that all drives that are present are powered on:
   a. Check the OCP or RMI for events.
   b. From the back of the library, verify that the green LED on each drive is illuminated.
2. Verify that the new drive power board is operating properly by checking the OCP or RMI; the event that indicated the drive power board was faulty should be cleared.
3. If the UID LEDs are still illuminated, deactivate them using the OCP or RMI.
4. Resume the host applications.

5.10 Replacing a Magazine

5.10.1 Unlocking the Magazine

Unlock the magazine using the OCP or RMI. If these methods fail, or if a magazine needs to be removed when the power to the device is off, you can release the magazine manually. Only one magazine or mailslot can be open at a time

NOTE As a best practice, perform this procedure while applications are idle. While the magazine is extended, the library robotic assembly cannot move media

Using the OCP

1. Log in as an administrator.
2. On the Home screen, tap **Open Magazine**.

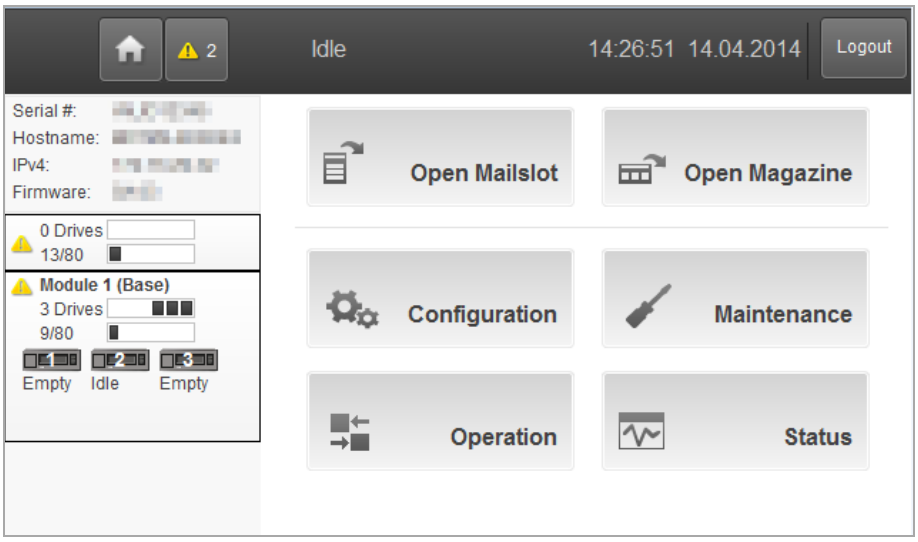

3. Tap **Open** in the left or right magazine column within the module containing the magazine to be replaced.

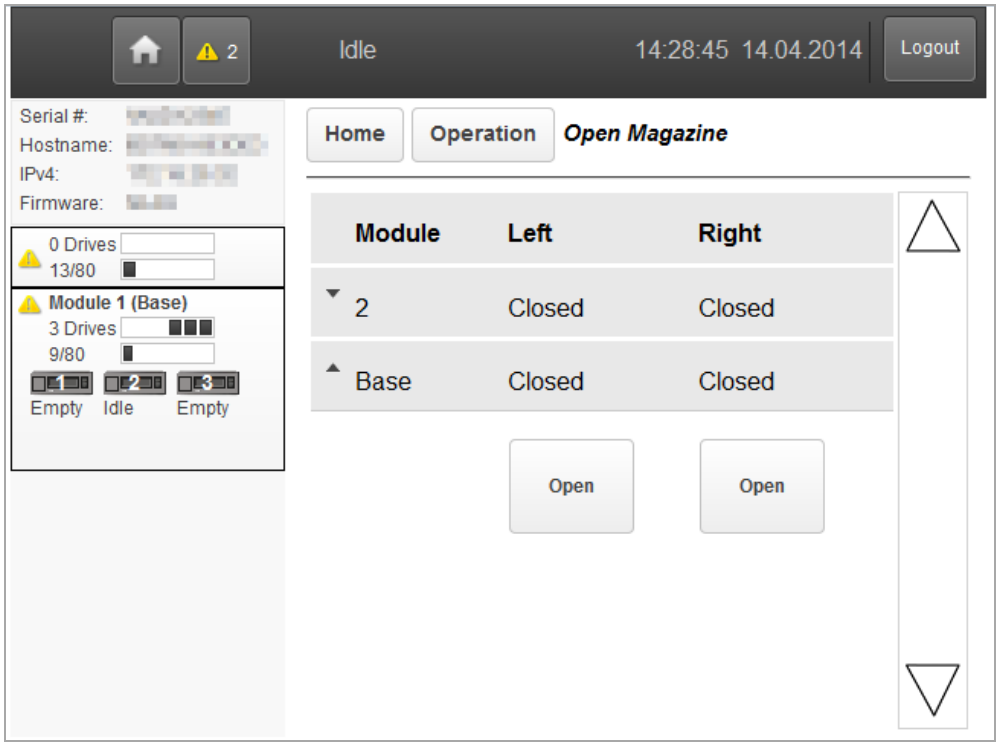

4. A message box indicates when the magazine has been unlocked.
5. The **Open Magazine** screen shows that the magazine is now unlocked.

NOTE If not removed, the magazines and the mailslot will relock after 30 seconds.

Using the RMI

1. Log in as an administrator.

2. On the Home screen, click **Open Magazine**.

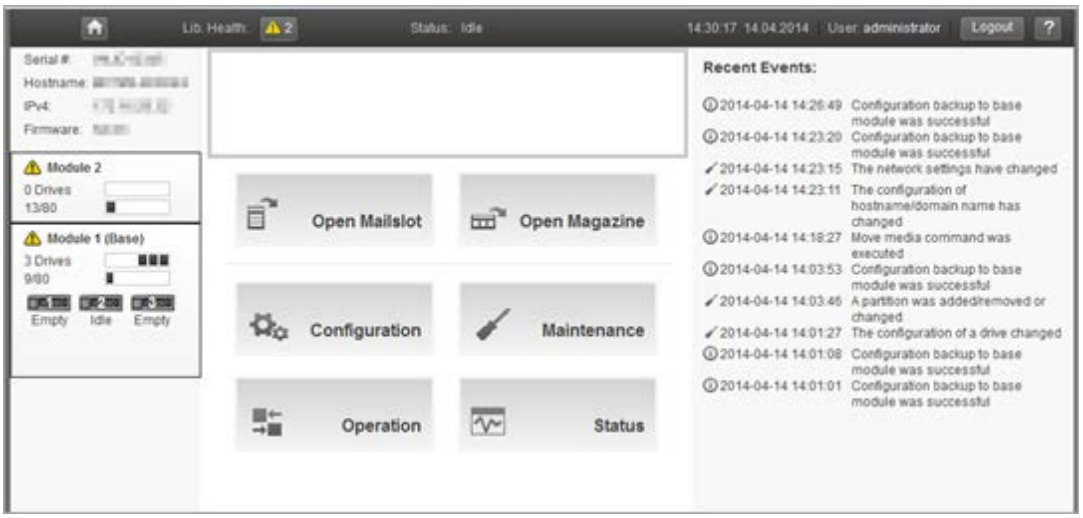

3. Click **Open** in the left or right magazine column within the module containing the magazine to be replaced.

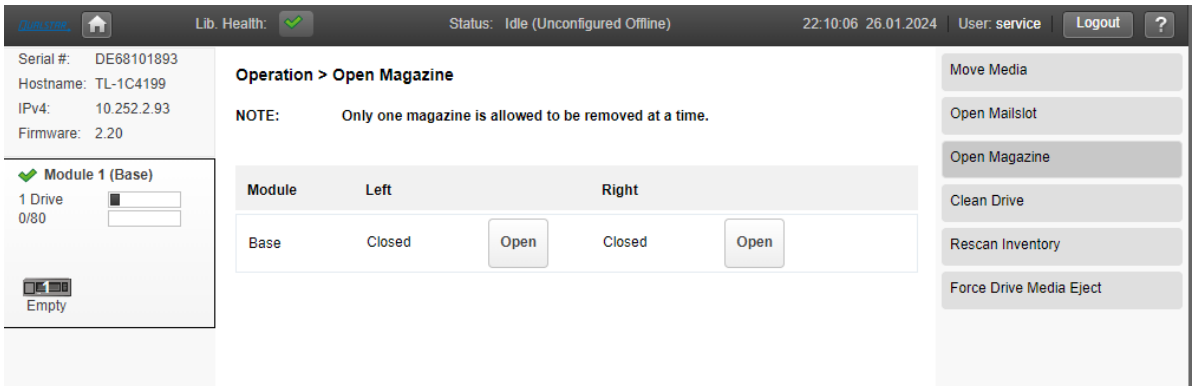

4. A message box indicates the magazine has been unlocked.
5. The **Open Magazine** screen shows that the magazine is now unlocked.

NOTE The magazines and the mailslot will relock again after 30 seconds.

Using the Manual Release

1. Open the magazine access door.
2. Insert a small flat head screwdriver or Torx driver into the appropriate magazine release hole and gently push the tab in.

! IMPORTANT Do not exert force once you encounter resistance. Doing so can damage the device.

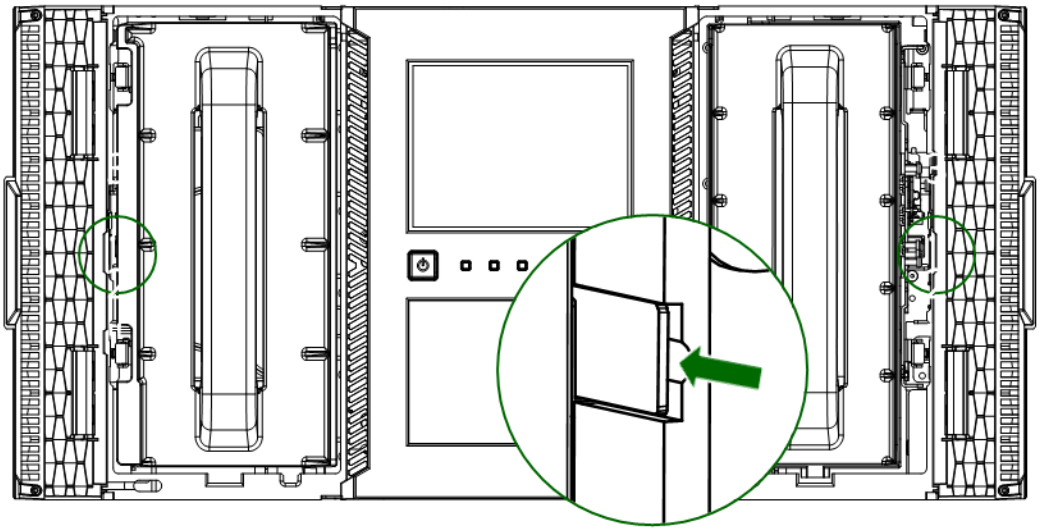

3. Slowly pull the magazine handle until the magazine is free of the latch.

5.10.2 Removing the Tape Cartridges

1. Slowly pull the magazine handle until the magazine is fully extended.

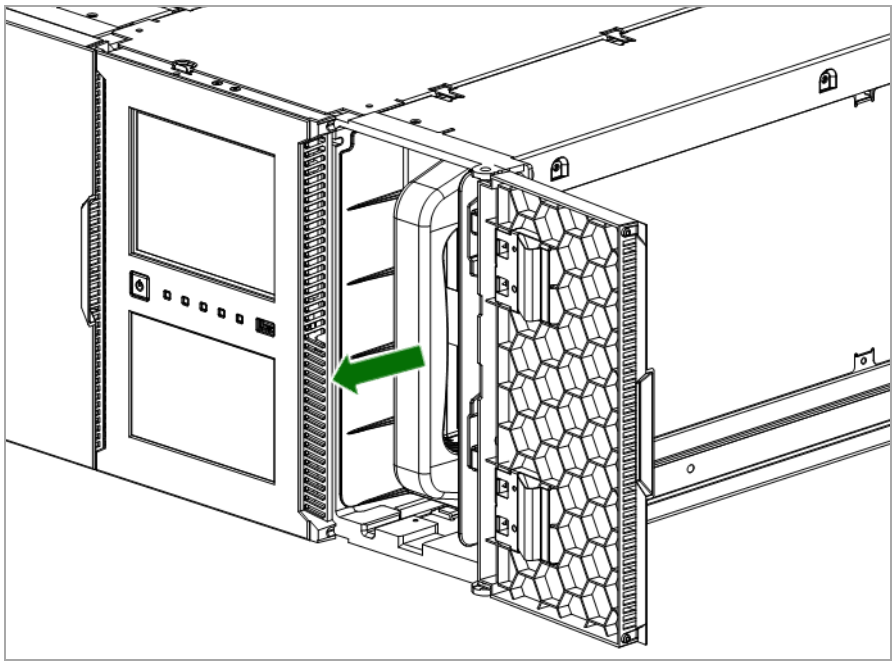

2. Remove the tape cartridges noting their locations within the magazine. You will place them in the same locations in the new magazine after it is installed.

5.10.3 Removing the Magazine

1. Push the magazine approximately 12 mm (0.5 inches) back into the module to remove tension from the release mechanism.

2. On the back side of the magazine, while pushing the two red latches toward the front of the rack slide the magazine until clear of the release mechanism.

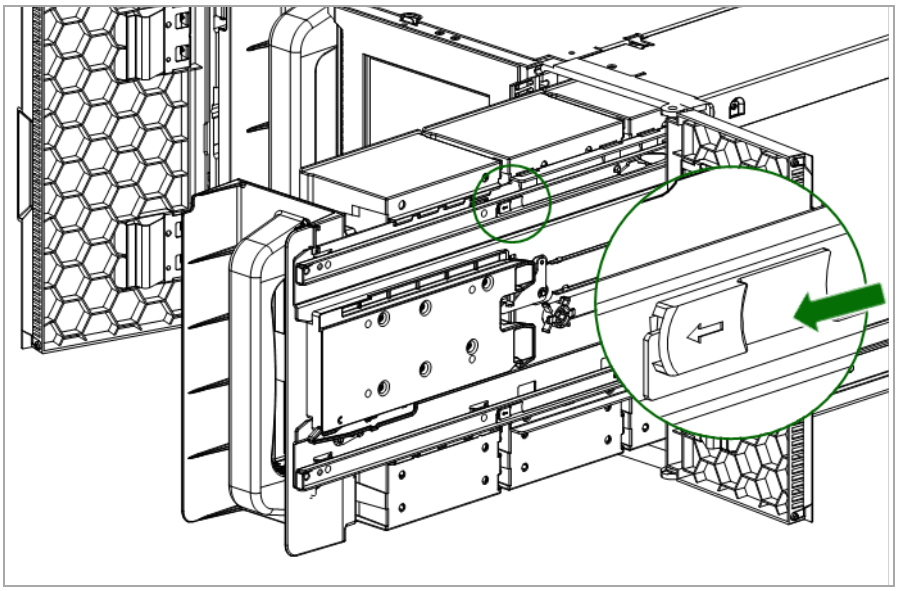

3. Use one hand to completely remove the magazine from the module while using the other hand to support the bottom.

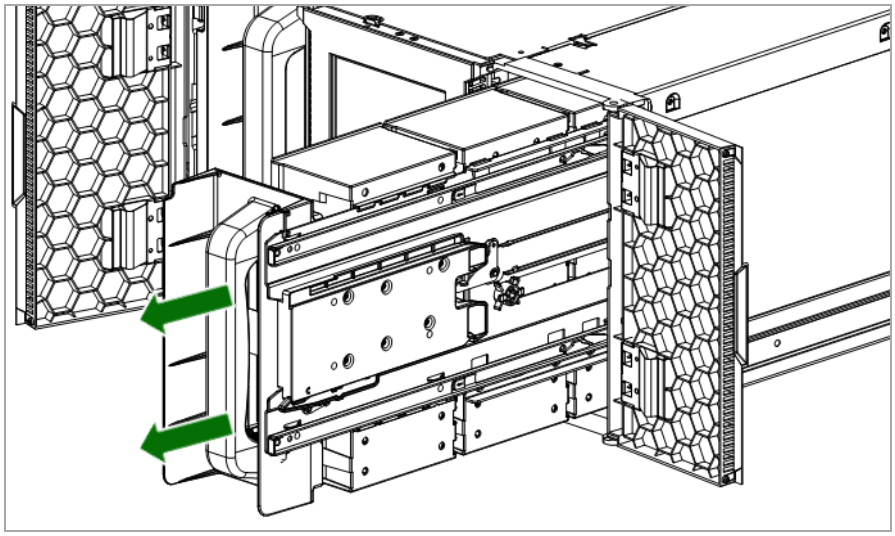

5.10.4 Installing the Magazine

1. Position the upper and lower magazine rails onto the alignment rails.
2. Push in slowly until the magazine rails are properly seated and the magazine is only slightly extended (stop before locking the magazine).
3. Pull the magazine back out until fully extended.
4. Load the tape cartridges into the new magazine in the same locations they were in previously.
5. Push the magazine handle slowly until the magazine release latch snaps into place. The magazine locks into place after it is correctly installed.

© Copyright QUALSTAR 2016

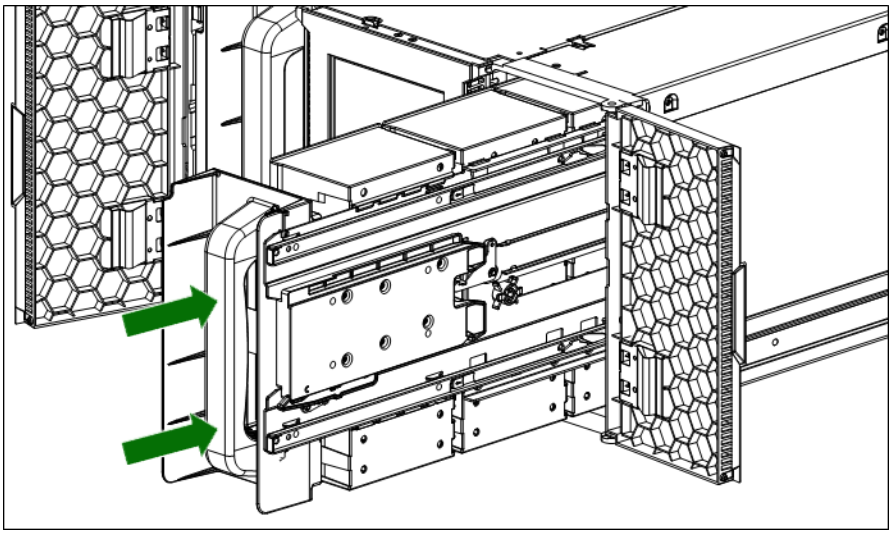

5.10.5 Verifying the Magazine Installation and Operation

Using the OCP or RMI:

1. Confirm that the replaced magazine is closed.
2. Confirm that the cartridges in the replaced magazine are inventoried. If you replaced the right magazine, confirm that the cartridges in the mailslot are inventoried.
3. If you replaced the right magazine, unlock the mailslot using the OCP or RMI, pull it out, and push it back in.

© Copyright QUALSTAR 2016

5.11 Replacing a module

WARNING

Product Weight

Each Q80 module weighs more than 40 kg (88 lbs) without drives or tapes and more than 70 kg (144 lbs) with 6 tape drives and 80 tapes.

Risk of personal injury

Before moving or lifting a library:

- Observe local health and safety requirements and guidelines for manual material handling.
- Remove all tapes to reduce the weight and to prevent cartridges from falling into the robotics path and damaging the library.
- Remove all tape drives to reduce the weight.
- Obtain adequate assistance to lift and stabilize the library during installation or removal.

Risk of damage to devices

When placing a library into or removing the library from a rack:

- Extend the rack's levelling jacks to the floor.
- Ensure that the full weight of the rack rests on the levelling jacks.
- Install stabilizing feet on the rack.
- Extend only one rack component at a time.

CAUTION

Parts can be damaged by electrostatic discharge. Keep parts in electrostatic containers until needed. Ensure you are properly grounded when touching static sensitive components.

5.11.1 Overview

To replace the module, you will:

1. Save the library configuration.
2. Remove tape cartridges and power off the library.
3. Remove all the components from the module and disconnect the power cords and cables.
4. Remove the module from the rack.
5. Install the replacement module into the rack.
6. Replace the components and cables.
7. Connect the power cords, power on the library, and verify the operation.
8. Replace the tape cartridges.

You will need a T-10 Torx screwdriver to remove the drive bay covers and a small flat head screwdriver. Have several static safe bags available for the boards being moved to the replacement chassis.

Before beginning this replacement procedure

Ensure that the rack is level side to side and front to back.

Verify that any applications using the library are idle.

CAUTION If the temperature in the room where the replacement module will be installed varies by 15° C (30° F) from the room where it was stored, allow it to acclimate to the surrounding environment for at least 12 hours before unpacking it from the shipping container.

5.11.2 Saving the Configuration

The library configuration settings are on the library chassis and will be restored automatically when the controller is replaced. However, Qualstar recommends saving the configuration settings before removing the controller board. See "Saving the library configuration to a file" (page 39) for instructions on saving configuration settings to a file or USB flash drive via the OCP or RMI.

5.11.3 Unlocking the Magazine

Unlock the magazine using the OCP or RMI. If these methods fail, or if a magazine needs to be removed when the power to the device is off, you can release the magazine manually. Only one magazine or mailslot can be open at a time. For detailed instructions, see "Unlocking the magazine" (page 96).

NOTE As a best practice, perform this procedure while applications are idle. While the magazine is extended, the library robotic assembly cannot move media.

5.11.4 Removing the Tape Cartridges

Remove the tape cartridges noting their locations within the magazine. You will place them in the same locations in the new magazine after it is installed. For detailed instructions, see "Removing the tape cartridges" (page 98).

5.11.5 Powering Off the Library

Power off the library from the front panel. Depress the power button and hold it for 3 seconds. If the library does not perform a soft shutdown, depress and hold the power button for 10 seconds.

Verify that the robotic assembly is in its parked position. Look inside the base module window to verify that the robotic assembly is behind the OCP.

Verify that all host processes are idle.

5.11.6 Removing the Module Cables

1. Remove the power cords from the module being replaced.
2. Remove the expansion interconnect cables from the module being replaced and from the modules connected to it.

NOTE Completely removing the cables from both ends prevents damaging the expansion interconnect cables during module removal and replacement.

3. Remove any SAS, FC, or Ethernet cables from the module being replaced.
4. Remove the USB device, if present.

5.11.7 Removing the Tape Drives

Remove any tape drives from the module being replaced. The library tracks the drive locations and will issue events if the drives aren't in the expected locations. Note the drive locations so they can be replaced in the same order and drive bays.

1. Use your fingers to loosen the blue captive thumbscrews on the tape drive.
2. Pull straight back on the tape drive handle while supporting the bottom of the drive to remove it from the module.

CAUTION Support the bottom of the tape drive when removing it to avoid damaging any of the internal connections.

5.11.8 Removing the Module from the Rack

Obtain assistance to lift and stabilize the module during removal and replacement.

1. If you are removing a module that has a module immediately above and/or below it:
   a. From the front of the library, use your fingers to loosen the captive thumbscrews two full turns on the module and its adjacent modules.
   b. From the back of the library, unlock the alignment mechanisms connecting the module with the adjacent modules and secure the alignment mechanisms in the unlocked position.

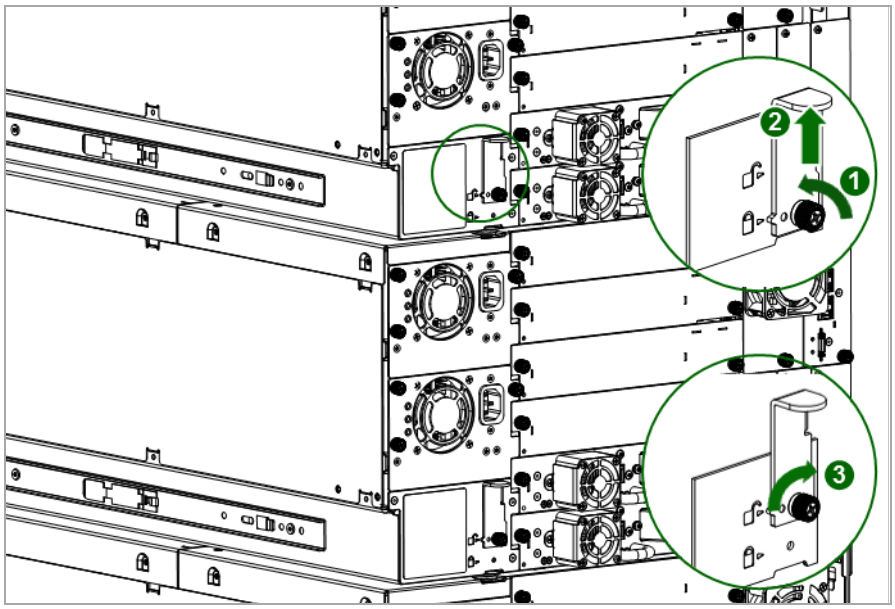

2. From the front of the library, use your fingers to loosen the thumbscrews on the module to be removed and slide the module out until it stops.
3. With assistance, release the locks on the side of the rails and slide the module out of the rack.

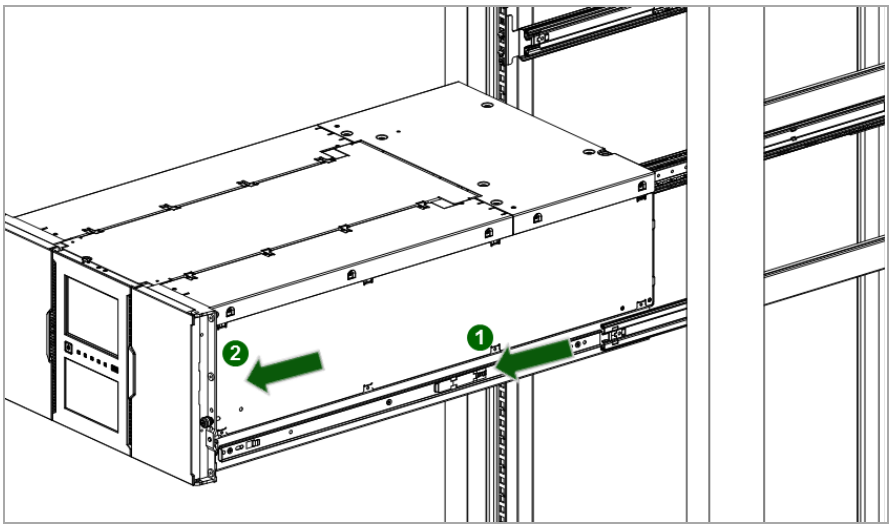

CAUTION Support the module from the sides to avoid damaging it.

5.11.9 Moving Library Cover Plates

Unpack the replacement module and place it on a sturdy work surface. Save the packaging materials to return the empty module.

The library has removable top and bottom cover plates. The two covers are identical and the process for removing and installing them is the same for the top and bottom of the module. See "**Preparing the Top and Bottom Modules**" for details; while this procedure refers to moving a cover from the base module, the information is the same for moving a cover from an expansion module.

The replacement module is shipped with a bottom cover plate but not a top cover plate. Move the cover plates as necessary so the replacement module has the cover plates in the same location as the empty module and the empty module has a bottom cover plate.

5.11.10 Installing the Module into the Rack

1. Extend the middle rails until they lock into place. Move the sliding assembly to the front of the middle rails.

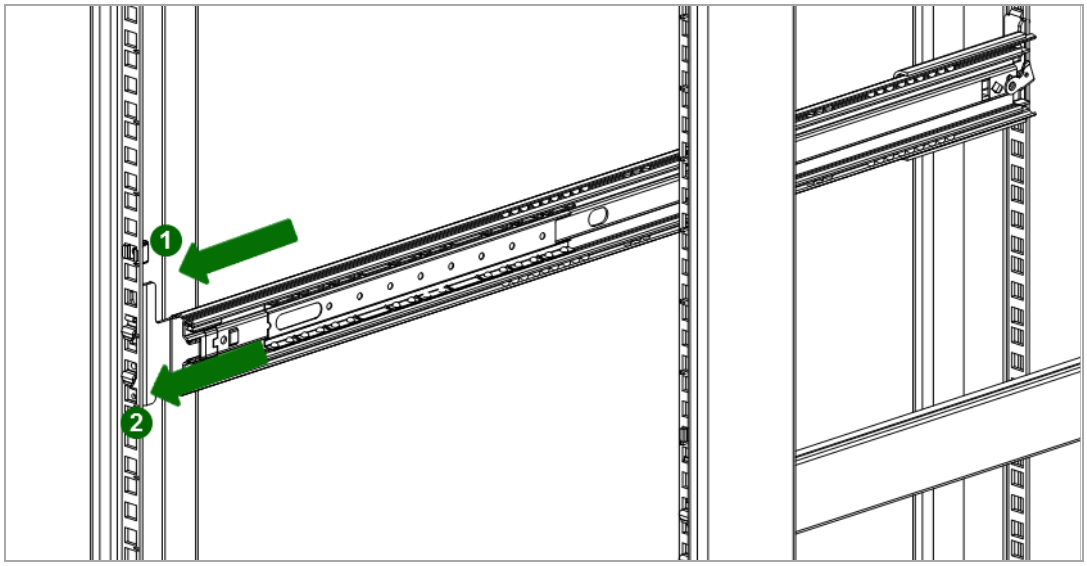

2. Slide the inner rails, which are attached to the module, into the middle rails. Slide the module into the rack.

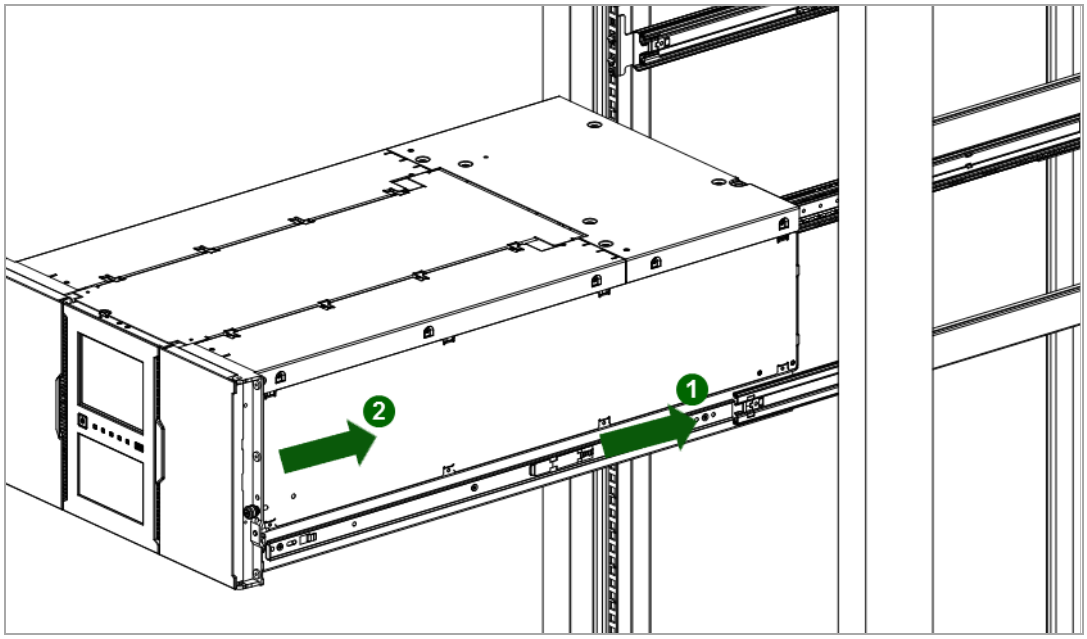

3. Use your fingers to tighten the captive thumbscrew on each side of the module.

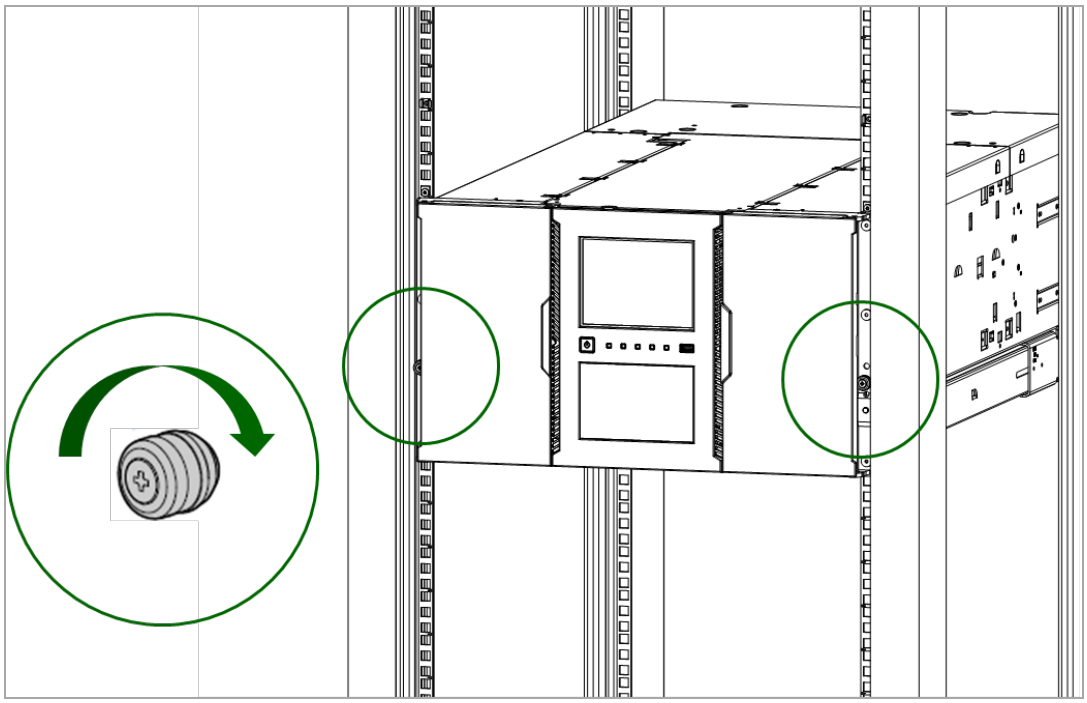

4. If there are adjacent modules:
   a. From the front of the library, use your fingers to loosen the captive thumbscrews on the replacement module and all modules above it two full turns.
   b. From the back of the library, starting with the replacement module and the one below it, align the modules and lock them together. Repeat for each pair of modules.
   c. Use your fingers to loosen the thumbscrew on the alignment mechanism that will connect the upper module with the lower module.
   d. Lower the alignment mechanism. If you encounter resistance, adjust the upper module so the pin in the alignment mechanism moves into the hole in the lower module. When the alignment mechanism is in the locked position, tighten the thumbscrew with your fingers.
   e. From the front of the library, tighten the thumbscrews on all modules with your fingers.

© Copyright QUALSTAR 2016

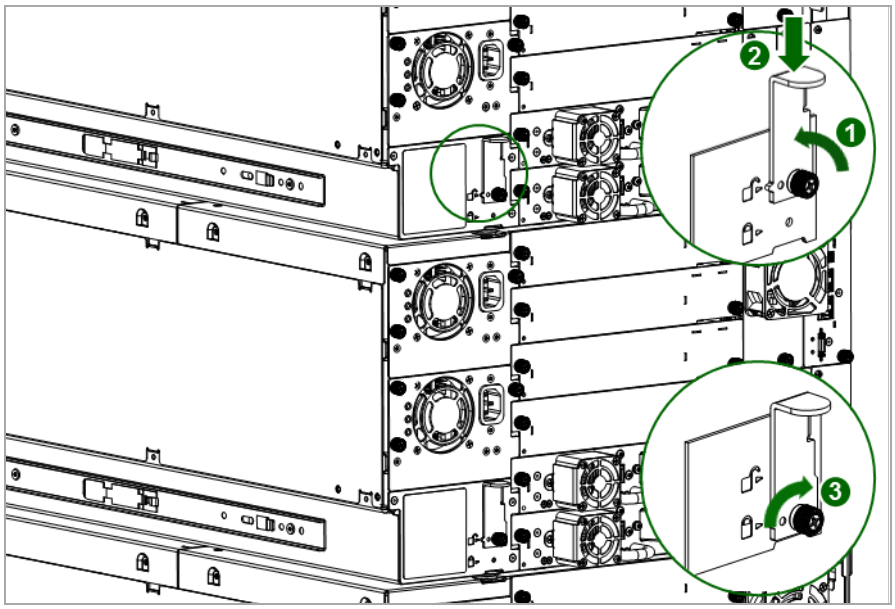

5.11.11 Replacing the Module Components and Cables

Replace the module components by reversing the removal procedures. Align the components carefully in the guide slots and only tighten thumbscrews with your fingers. If the thumbscrews cannot be tightened easily, verify that the component is aligned properly.

1. Replace the drive power boards and chassis fan assembly.
2. Replace the controller board.
3. Replace the tape drives in the same locations.

TIP To assist in aligning the drive, only remove the drive bay covers for one drive at a time.

4. Replace the power supplies.
5. Reattach any SAS, FC, expansion interconnect, and Ethernet cables removed earlier.
6. Reinsert the USB device if you removed it earlier.
7. Reattach the power cords.

5.11.12 Verifying the Library Configuration

Power on the library by pressing the button just below the OCP.

Verify that the library initializes correctly and that the status is Ready. Verify that the replacement module is visible in the OCP or RMI.

Under normal operation the library configuration is saved on the base module controller.

Replace the tape cartridges in the same locations.

© Copyright QUALSTAR 2016

5.12 Replacing the Robotic Assembly and Spooling Mechanism

CAUTION Parts can be damaged by electrostatic discharge. Keep parts in electrostatic containers until needed. Ensure you are properly grounded when touching static sensitive components.

! IMPORTANT Under normal circumstances, when the library is powered off using the front power button, the robot automatically parks and locks into the base module behind the OCP. After powering off the library and before proceeding with the robotic assembly and spooling mechanism removal, look inside the base module window to verify that the robotic assembly is behind the OCP. If you do not see the robotic assembly completely in the base module, see "**Returning the Robotic Assembly to the Base Module**" for troubleshooting information.

5.12.1 Powering Off the Library

Power off the library from the front panel. Depress the power button and hold it for 3 seconds. If the library does not perform a soft shutdown, depress and hold the power button for 10 seconds.

Verify that the robotic assembly is in its parked position. Look inside the base module window to verify that the robotic assembly is behind the OCP.

Verify that all host processes are idle.

5.12.2 Preparing to Remove the Robotic Assembly and Spooling Mechanism from the Base Module

WARNING When extending a module from the library, to reduce the risk of personal injury or damage to equipment:

- Extend the rack leveling jacks to the floor.
- Ensure that the full weight of the rack rests on the leveling jacks.
- Verify that the rack is level side to side and front to back.
- Install the rack stabilizer kit on the rack.
- Extend only one rack component at a time. Racks may become unstable if more than one component is extended.

1. Loosen the front captive thumbscrews that connect the base module to the rack two full turns.
2. If there are adjacent Expansion Modules:
   a. Loosen the front captive thumbscrews two full turns on the adjacent expansion modules.
   b. On the back of the base module and the module above (if present), loosen the thumbscrews on the alignment mechanisms, move the alignment mechanisms into the unlocked position, and retighten the thumbscrews.
   c. Disconnect and completely remove the expansion interconnect cables from the base module and from the adjacent modules. Removing the expansion interconnect cables completely prevents damaging the cables when moving the module in and out of the rack.

3. Disconnect the power supply cables on the Base Module.
4. Disconnect the Ethernet, SAS, and Fibre Channel cables from the Base Module.
5. Completely loosen the front captive thumbscrews of the Base Module.
6. Slowly extend the Base Module from the front of the rack until the rails lock into place.
7. Remove the top library cover plate, if present:
    a. Push a small flat head or Torx screwdriver into the hole to retract the spring lock, slide the cover until it reaches the tool, remove the tool and continue sliding the cover to the front of the module until the tabs are released.
    b. Remove the cover from the module.

5.12.3 Removing the Robotic Assembly and Spooling Mechanism from the Base Module

1. Slide the cartridge carrier toward the center of the robotic assembly to access the robot locking lever.
2. Standing at the front of the module, unlock the robot by moving the blue lever to the left, then toward you, then to the right.
3. Place your fingers into the large holes on the robotic assembly and pull up slowly.

NOTE The robotic assembly will offer resistance. Lift the robotic assembly no faster than 12 mm (0.5 inch) per second.

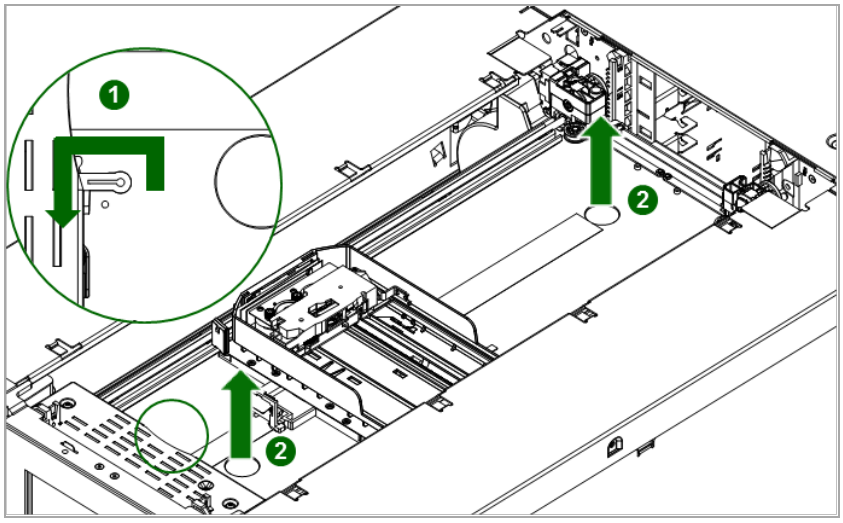

4. Lift the robotic assembly gently from the module and place it on top of the module on the right side (opposite the spooling mechanism) and slightly to the front. Take care not to damage the spooling cable.

5. On the top of the robotic assembly where the spooling cable is attached, use a small flat head or Torx screwdriver driver to press and push the small latch that unlocks the spooling cable.

NOTE Note where the end of the spooling cable pivots in the robotic assembly. This is important to know when you attach the new spooling cable to the robotic assembly.

6. Lift the spooling cable from the robotic assembly and place it in its cradle at the top of the spooling mechanism.

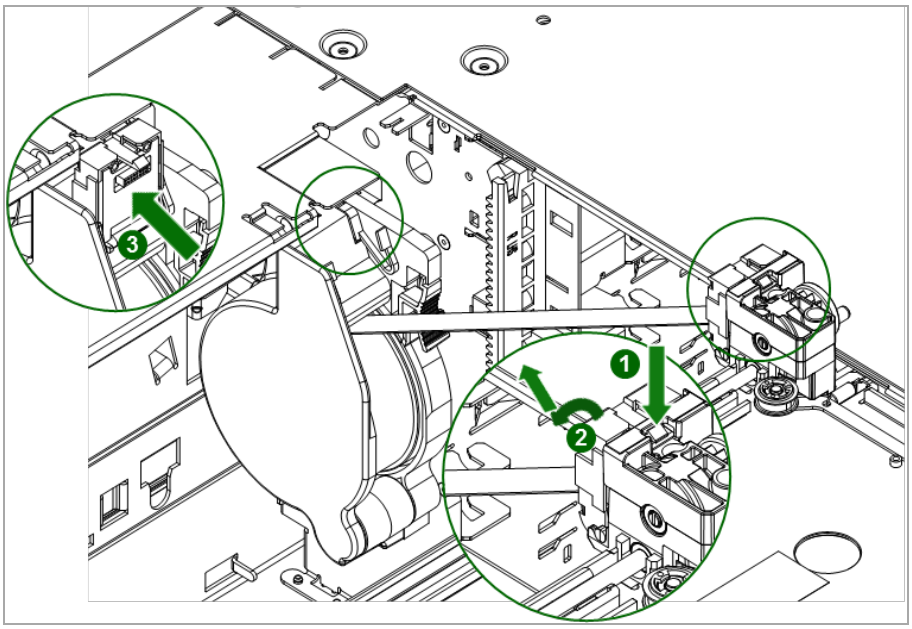

7. Set aside the robotic assembly.

! IMPORTANT If there is a tape cartridge still in the cartridge carrier, remove the cartridge by lifting it straight up; you may need to move the cartridge slightly from side to side.

8. Extend the left magazine out of the rack by approximately 15 cm (6 inch).
9. While pressing the latch near the top of the spooling mechanism, pull the entire spooling mechanism gently up until you see it clear the narrow part of the keyhole in the back left of the metal wall. It may help to push up from the bottom with your other hand.
10. Pull the spooling mechanism toward the front of the module until it disconnects and remove it from the module.

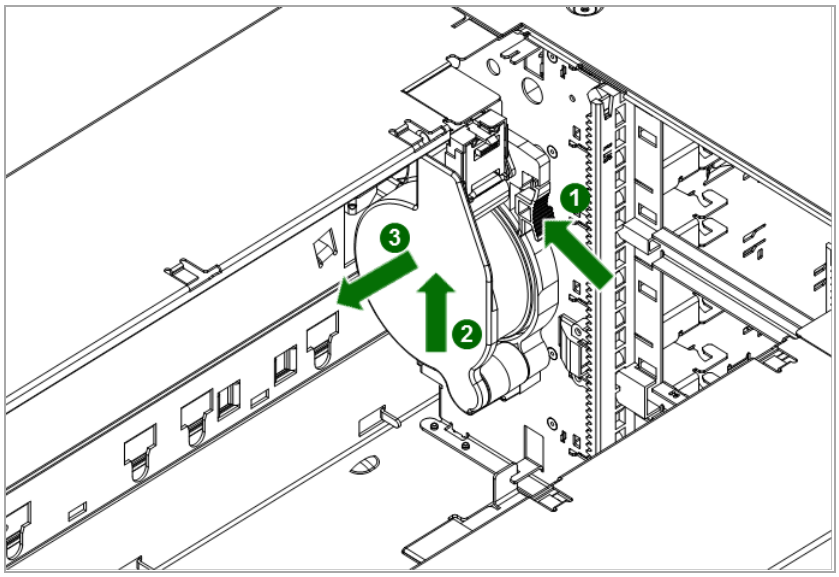

5.12.4 Installing the Robotic Assembly and Spooling Mechanism into the Base Module

1. Hold the spooling mechanism so that the end of the spooling cable that attaches to the robotic assembly is pointing up.
2. Align the tab on the back of the spooling mechanism with the keyhole in the back left of the metal wall.
3. Push the spooling mechanism in and down until it snaps into place.

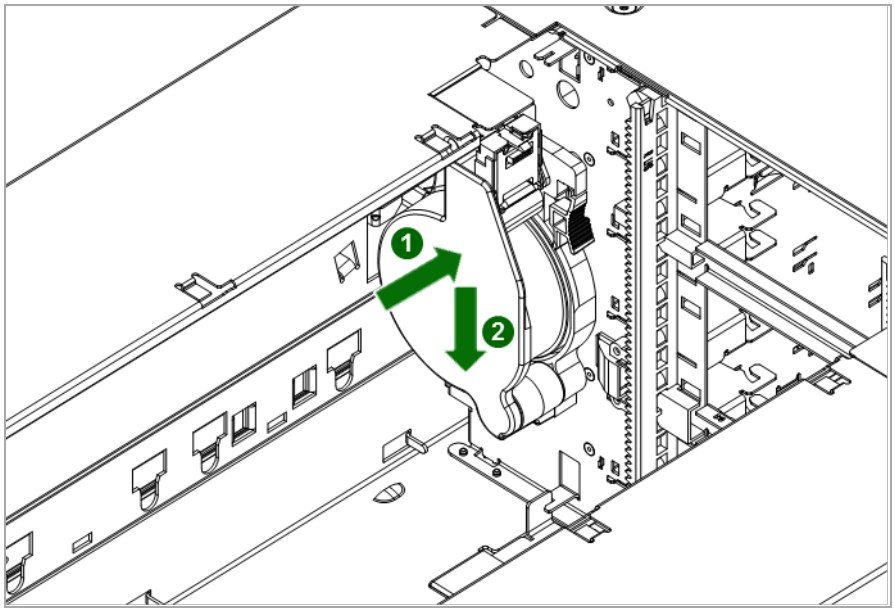

4. The robotic assembly is shipped with the robot in the unlocked position. Verify that it is unlocked. If the robot is locked, unlock it; standing at the front of the module, move the blue lever to the left, then toward you, then to the right.
5. Each corner of the robotic assembly has a gear with two protruding pins. Rotate one of the gears on the robotic assembly so that the two pins are aligned horizontally.
6. Place the gears of the robotic assembly into the grooves on the inside corners of the module. Confirm that all of the pins are touching the outside of the grooves.

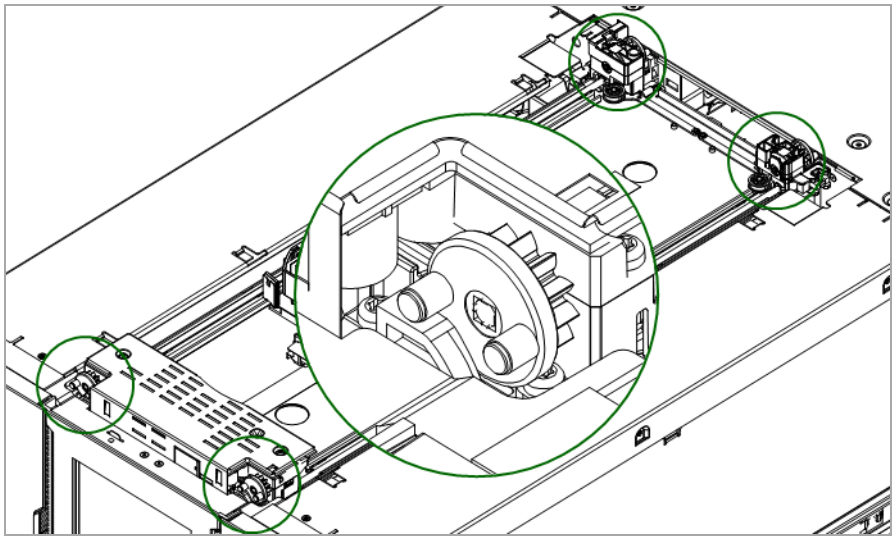

© Copyright QUALSTAR 2016

7. Push the robotic assembly down slowly until the platform of the robotic assembly is approximately 7.5 cm (3 inch) lower than the top of the module.

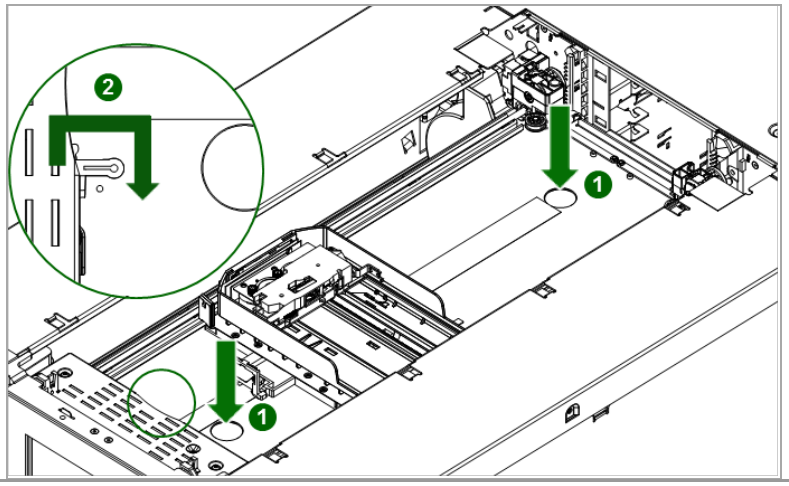

CAUTION Lower the robotic assembly no faster than 12 mm (0.5 inch) per second. If the robotic assembly is not aligned properly or you push too hard or too quickly, damage to the robotic assembly and the module may occur.

NOTE The robotic assembly should drop smoothly when applying gentle force. If it does not, check the alignment of the gears.

8. Lock the robot; standing at the front of the module, move the blue lever to the left, then away from you, then to the right.

9. Standing at the right side of the module, remove the end of the spooling cable that connects to the robotic assembly from its cradle.

10. Place the spooling cable into the grooves where it attaches to the robotic assembly and rotate until it snaps into place.

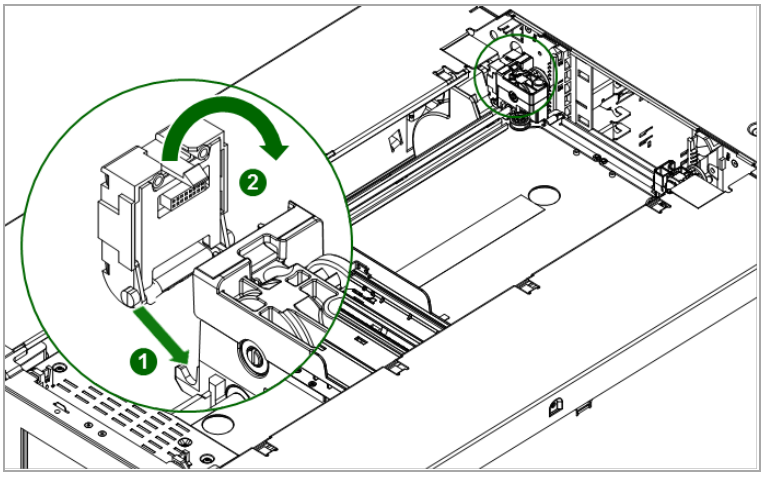

TIP If the end of the spooling cable drops into the module, unlock the robotic assembly, remove it from the module, return the end of the spooling cable to its cradle, return the robotic assembly to its previous position in the module, relock the robotic assembly, and repeat the procedure.

5.12.5 After the Robotic Assembly and Spooling Mechanism Installation

1. Push the left magazine back into the module until it locks into place.
2. Replace the top cover on the base module if you removed one. Align all tabs on the cover with the slots on the module, gently push it down, and then slide the cover toward the back of the module until the spring lock engages.
3. Slide the module into the rack.
4. If there are no adjacent modules, tighten the front captive thumbscrews with your fingers.
5. If there are adjacent modules:
   a. Loosen the thumbscrews on the alignment mechanisms that you previously unlocked.
   b. Lower the alignment mechanisms. If you encounter resistance, adjust the upper module so the pin in the alignment mechanism moves into the hole in the lower module. When the alignment mechanism is in the locked position, tighten the thumbscrew with your fingers.
   c. Tighten the front captive thumbscrews with your fingers on all of the modules that had been loosened.
   d. Reconnect the expansion interconnect cables.
6. Reconnect the Ethernet, SAS, and Fibre Channel cables to the base module.
7. Reconnect the power supply cables to the base module.
8. Pack the failed robotic assembly and spooling mechanism to return to your service.

5.12.6 Powering On the Library

Power on the library by pressing the power button on the base module just below the OCP; the green light will illuminate. When the library is powered on, it inventories the tape cartridges in the magazines, checks the firmware version on all modules, configures the tape drives, confirms the presence of the existing modules, and searches for any new modules.

5.12.7 Verifying the Installation

Verify that the library powers on and initializes correctly, and that the status is Ready. If the UID LEDs are still illuminated, deactivate them using the OCP or RMI.

5.13 Replacing the Front Bezel or OCP

CAUTION Parts can be damaged by electrostatic discharge. Keep parts in electrostatic containers until needed. Ensure you are properly grounded when touching static sensitive components.

5.13.1 Powering Off the Library

Power off the library from the front panel. Depress the power button and hold it for 3 seconds. If the library does not perform a soft shutdown, depress and hold the power button for 10 seconds.

Verify that the robotic assembly is in its parked position. Look inside the base module window to verify that the robotic assembly is behind the OCP.

Verify that all host processes are idle.

© Copyright QUALSTAR 2016

5.13.2 Removing the Bezel

1. Open the magazine access doors.
2. On one side of the bezel near the top, insert a small flat head or Torx screwdriver into the bezel release hole.
3. Push the screwdriver gently toward the middle of the bezel until that corner of the bezel is released.
4. Release the other top corner in the same manner.
5. Pull the bezel up until clear of the bottom brackets.

NOTE If removing a base module bezel, pull gently to avoid damaging the OCP cable. Note where the OCP cable is located, routed and attached.

6. If removing a base module bezel, disconnect the OCP cable

5.13.3 Installing the Bezel

1. If installing a base module bezel, connect the OCP cable to the new OCP. Ensure that the OCP cable is correctly routed in the channel behind the clear plastic window.
2. Place the bottom tabs of the bezel into the slots in the bottom of the module.
3. Rotate the bezel and snap in the top corners.

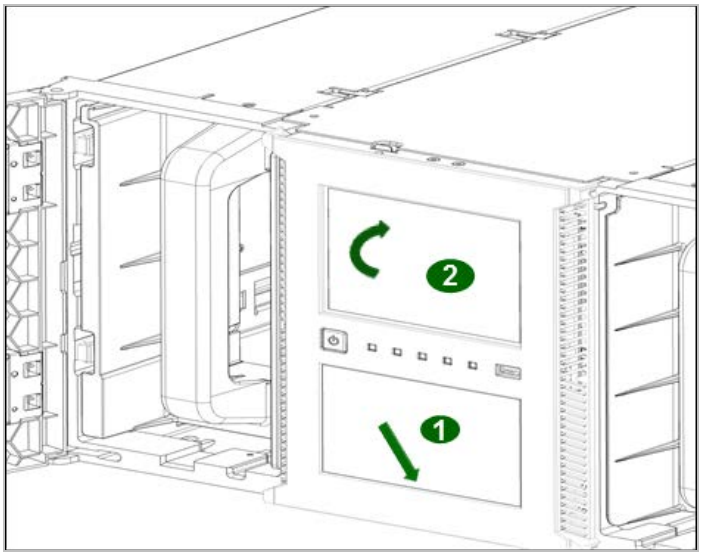

5.13.4 Library Troubleshooting Powering On the Library

Power on the library by pressing the power button on the base module just below the OCP; the green light will illuminate. When the library is powered on, it inventories the tape cartridges in the magazines, checks the firmware version on all modules, configures the tape drives, confirms the presence of the existing modules, and searches for any new modules.

© Copyright QUALSTAR 2016

5.14 Replacing Magazine Access Doors

5.14.1 Removing the Magazine Access Doors

1. Insert a small flat head screwdriver into the slot directly above the top hinge.
2. Use the screwdriver to pry the hinge free of the module while pulling the door toward you.
3. Remove the door from the module.

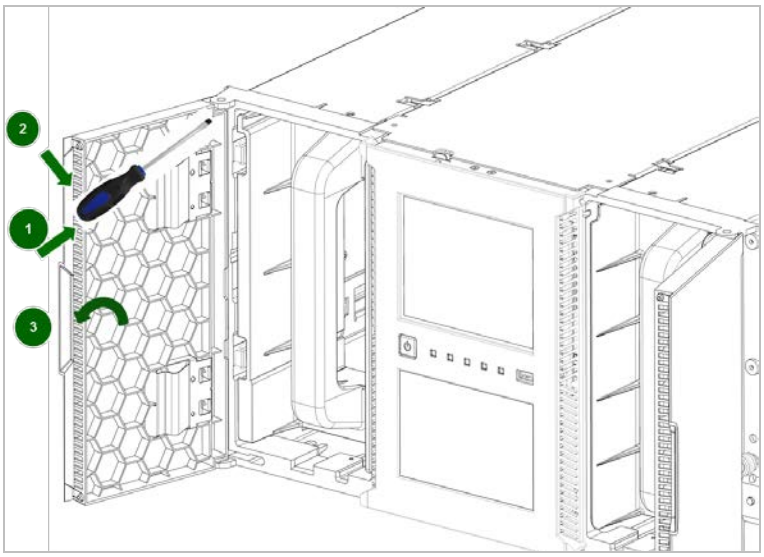

5.14.2 Installing the Magazine Access Doors

NOTE The doors are identical and can be mounted on either side of the module.

1. Orient the door so that the hinges are to the outside of the module.
2. With the door almost closed, insert the bottom hinge into the small recess on the module.
3. Snap the top hinge into place.
4. Verify that the door opens and closes normally.

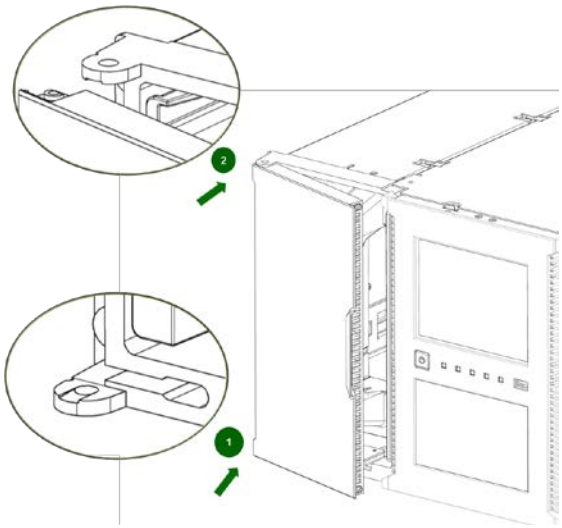

© Copyright QUALSTAR 2016

6 Library Troubleshooting

CAUTION This library is designed to operate when installed in a rack using the rack rail kit. Operating the library without installing it in the rails, such as on a table or rack shelf, could result in library errors. Placing any weight on top of the library might also cause errors.

6.1 Fibre Channel Connection Problems

Use the **Status> Drive Status** screen to check the link connection for your tape drive.

If the screen shows Logged Out:

- Check that the Fibre speed is set to Automatic or that the correct Fibre speed is selected. If you are unsure of the speed of the HBA or switch that the drive is connected to, try Automatic.
- Check that the correct port type, fabric or loop, is selected. Loop requires additional configuration. If you are unsure of the correct port type, try Automatic.

If the screen shows No Link, the Speed Status is - and the Link LED on the back of the drive is off:

- The speed is probably set incorrectly. Try setting the speed to Automatic.
- If there are still issues, change the port type to Auto Detect. If the screen shows No Light:
- The cable is not plugged in correctly. Check that it is connected correctly to Port A of the tape drive.
- The cable is damaged. FC cables are delicate. If the cable has been bent or twisted sharply, it might be broken and must be replaced.

If the screen shows ALPA Conflict:

- There might be a conflict with the ALPA address on Loop ports. Select Soft for the Loop mode to allow the system to select an available address each time the tape drive connects to the FC fabric. If your server configuration does not support changing addresses, try using the Hard Auto-Select option for the Loop mode. This allows the system to select an available address when it first connects, and then retain that address for future connections.

6.2 Detection Problems after Installing a SAS Drive

Problems encountered after installation are often caused by improper SAS cable connections, application software configuration errors, or an incorrectly configured operating system. If the application software or operating system does not communicate with the library after installation, determine the extent of the detection problem:

- Does the application software detect the tape drive?
- Does the application software detect the library?
- Does the operating system detect the tape drive?
- Does the operating system detect the library?
- Does the operating system detect the library, but list it as a generic device? Based on the extent of the detection problem, check the following:
- If neither the application software nor operating system detect the tape drive, or they do not detect both the tape drive and the library:

  - Verify that all SAS cables are securely connected on both ends. The mini-SAS connector on the tape drive is keyed at location four, which is the standard location for end devices.
  - Check the length and integrity of your SAS cabling. For reliable operation, do not use a SAS cable longer than six meters. Do not use a cable adapter or converters between the HBA and the library.
  - Check the SAS connectors for damage or debris.
  - Verify that your HBA is supported by the host computer and qualified with the library.
  - Verify that your HBA has the latest firmware.
- If the application software or operating system detects the tape drive, but not the library:
  - Verify that multiple LUN support is enabled on the HBA. The library uses two Logical Unit Numbers (LUNs) to control the tape drive (LUN 0) and robotic (LUN 1). The library requires an HBA with multiple LUN support and multiple LUN support must be enabled on the host computer. When multiple LUN support is not enabled, the host computer can see the tape drive, but not the library.

NOTE Many RAID or array controllers do not provide multiple LUN support.

- If the application software or operating system does not detect any devices on the HBA:
  - Verify that the SAS host adapter is installed correctly. Refer to the manual that came with your host adapter for installation and troubleshooting instructions. Pay particular attention to any steps describing configuration settings. Make sure that the host adapter is properly seated in the motherboard slot and the operating system correctly detects the host adapter.
  - Verify that the proper device driver is installed for the SAS host adapter.
- If the library is detected by the operating system, but not by the application software:
  - Refer to the documentation included with your backup application for instructions on how to verify proper installation. Some backup software packages require an additional module to communicate with the robotics.
- If the library is detected by the operating system, but is listed as an unknown or generic device:
  - Make sure that the proper device driver, if applicable, is installed for the device. Check your software provider's website for the latest drivers and patches.

NOTE Many backup applications use their own drivers. Before installing a driver, make sure it is not in conflict with the application software.

If you continue to have problems with a SAS library, check the following:

- Ensure that the library is compatible with the SAS host adapter and backup application you plan to use.
- Verify that your HBA is supported by the host computer and qualified with the library.
- Ensure you are using a compatible, high-quality cable.

6.3 Operation Problems

Table 10: Power Problems

Problem	Solution
Device does not power on.	1. Check all power cord connections. 2. Check the LEDs on the power supplies. 3. Make sure the power button on the front panel has been pressed, and the green **Ready** LED is lit. 4. Make sure the outlet has power. Try another working outlet. 5. Replace the power cord.
No message appears on the OCP display	1. Check all power cord connections. 2. Check the LEDs on the power supplies. 3. Make sure the power button on the front panel has been pressed, and the green **Ready** LED is lit. 4. Make sure the outlet has power. Try another working outlet.

Table 11: Failure/Attention Indications Displayed on the Front Panel

Problem	Solution
The LCD displays a warning or error icon.	Tap the icon to see more information about the event on the LCD.
The LCD displays an error code.	Look up the error code, try to resolve the failure, and power cycle the library (see **Event Codes**).

Table 12: Tape Movement Problems

Problem	Solution
Tape stuck in drive.	Try the following steps, in this order, to remove the stuck tape. **NOTE:** The tape drive must rewind the tape before ejecting it. This can take as long as five minutes, depending on how much tape must be rewound. Once the tape is rewound, the eject cycle will take fewer than 16 seconds. The **Ready** light flashes while the tape rewinds. Wait for the tape to finish rewinding before attempting another operation. 1. Attempt to unload the tape from your backup software. 2. Stop all backup software services including the operating system's removable storage services. From the **Operation > Move Media** screen, attempt to unload or move the tape to a slot. 3. Power down the library, disconnect the cable from the drive, power up the library, and wait until the tape drive is idle or ready. From the **Operation > Move Media** screen, attempt to unload or move the tape to a slot.

© Copyright QUALSTAR 2016

Problem	Solution
	4. From the **Operation > Force Drive Media Eject** screen, attempt a force eject or emergency unload operation. **IMPORTANT:** Inspect the tape cartridge that was stuck. Damage or misplaced labels on the cartridge could have caused the load/unload failure. Discard any tape cartridge found to have issues.
Tape cannot be removed from storage slot	If the OCP or RMI is still operational: 1. Unlock the magazine from the **Operation > Open Magazine** screen and extend it to access the storage slot. 5. Grasp the cartridge and remove it from the storage slot. Some tapes need to be inserted and removed several times to condition them for free movement in and out of the magazine. 6. Check the barcode label and verity that it is secure to the cartridge. 7. Check the cartridge for damage. 8. Check the storage slot for damage.

Table 13: Media Problems

Problem	Solution
Cleaning or data cartridge incompatible with drive.	• Check the event log to see which cartridge is incompatible. • Make sure you are using data and cleaning cartridges that are compatible with the drive and model of your device and that you are using the correct cartridge type for the operation. The device automatically unloads incompatible cartridges, the **Attention** LED flashes. Export the media.
Cannot write to or read from tape.	• Make sure that the cartridge is not a WORM cartridge that has already been used. • Make sure that the cartridge is write enabled (move the write-protect switch to the enabled position). • Make sure the data cartridge is compatible with the drive model. See Table 7 for media and drive compatibility. • Make sure you are using an Ultrium cartridge that has not been degaussed. **Do not degauss Ultrium cartridges!** • Make sure that the cartridge has not been exposed to harsh environmental or electrical conditions and is not physically damaged in any way. • Backup applications do not read or write to cartridges that were created using a different backup application. • Make sure you understand any data protection or overwrite protection schemes that your backup application may be using, which could prevent you from writing to a given cartridge. • Retry the operation with a different, known good tape. • Clean the tape drive from the **Operation > Clean Drive** screen.

Table 14: Attention LED is Lit

Problem	Solution
Both the Attention and Cleaning LEDs are lit.	This is most likely caused by a dirty drive that cannot read a tape and marks the tape invalid. Log into the OCP or RMI and check the event log to see which drive has reported that it needs cleaning. Clean the drive with an approved Ultrium cleaning cartridge.
A particular cartridge sets off the cleaning light.	Remove the cartridge from the library.
A cartridge recently imported from a different environment is causing issues.	Media that is moved from one environment to another can cause issues until it has acclimated to the new conditions. A cartridge should be acclimated for at least 24 hours before being used, particularly if it has been stored at a substantially different temperature or level of humidity than the device.
The Attention LED is lit but the Cleaning LED is not lit after a cartridge load.	The library was unable to complete the requested operation with the selected tape cartridge. • Use only cartridges that are compatible with the drive type • Use the correct type of cartridges for the operation. For example, use a cleaning cartridge for cleaning. • Make sure you are using an Universal cleaning cartridge
The Cleaning LED is lit after using a cleaning cartridge.	The cleaning cartridge has expired. A cleaning cartridge will expire after 50 cleaning cycles.
A particular cartridge sets off the Attention LED and possibly the Cleaning LED.	Retry the operation with a different cleaning cartridge. If the Attention LED is cleared and the drive has been cleaned, and then immediately re-displays each time a particular cartridge is reloaded, that cartridge should be suspected as being defective. • If this occurs, export the cartridge and load a known good cartridge. In some cases, a cartridge can be worn out, have a defective Cartridge • Memory, or have been formatted as a Firmware Upgrade Cartridge. • Any cartridge that is suspected of being defective or contaminated should NOT be reused in any drive. • If the bad cartridge is a cleaning cartridge, it might be expired.

Table 15: Inventory Problems

Problem	Solution
The library displays incorrect bar codes.	• Verify that the label is properly applied. • Verify that the label is not soiled.

© Copyright QUALSTAR 2016

Table 16: RMI Network Connection Issues

Problem	Solution
Cannot connect to the RMI.	• Verify that the Ethernet cable is connected to the base module's controller board and to the LAN. • Verify that the link LED on the RJ45 (LAN) connector is lit when the device is powered up. If the LED is not lit, the device is not communicating with the LAN. See your network administrator for help. • Verify that the device has been configured with a valid static network address or DHCP has been enabled so the device can obtain a network address. If using DHCP, write down the device's network address from the OCP login screen. If the device did not obtain a valid address via DHCP, verify that the DHCP server is up and the library has network access to it. If necessary, set a static network address instead. • Enter the library's IP address into the address bar of a web browser connected to the same LAN as the device. If the RMI web page does not display, ping the device's IP address. If the ping fails, verify that the device has a valid network address and that there are no firewalls or other obstructions to network traffic between the computer with the web browser and the device. See your network administrator for help.

Table 17: Cleaning Problems

Problem	Solution
Cannot load the cleaning cartridge.	• Make sure you are using an Ultrium cleaning cartridge. • Make sure the cleaning cartridge has not expired. A cleaning cartridge will expire after 50 cleaning cycles. • Power cycle the library.

6.4 Performance Problems

The process of backing up files involves many system components, from the files in the file system on the disk, through the backup server, and out to the library, all managed by software running on an operating system. The backup process can only run as fast as the slowest component in the system.

Performance issues are solved by identifying and addressing performance limitations in your system. See sections below for the following potential performance limitations:

- Average File Size
- File System Type
- Connection from the Backup/Archive Host Server to the Disks
- Backup/Archive Server
- Backup/Archive Software and Method
- Connection from the Backup/Archive Host Server to the Device
- Media

6.4.1 Average File Size

The hard drive must seek to the position of a file before it can start reading. The more time the disks are seeking to files, the lower the performance. Therefore, if the average file size is small, the read performance will be lower.

To determine the average file size, divide the size of the backup by the number of files.

If the average file size is small (64 KB or less), consider using a sequential, image, or block backup method that backs up the whole hard drive or LUN image instead of individual files. The trade off for using one of these methods is that you might only be able to restore the entire image instead of individual files.

NOTE File fragmentation will also cause excessive drive seeking, which lowers performance, so ensure that files are regularly defragmented.

6.4.2 File Storage System

The file storage system determines the organization of the files on the disks. Using RAID controllers to spread files over multiple disks can improve performance because some disks can be seeking while others are reading. Storing files on a single non-RAID disk results in the slowest performance while storing files on a high-end disk array results in the fastest performance.

Converting standalone disks to RAID can improve performance.

6.4.3 Connection from the Backup/Archive Host Server to the Disk Array

The connection between the host server and the disks determines how much data can be transferred from the disks to the host computer at a time. A connection with insufficient bandwidth cannot provide enough data for the tape drives to write at full speed. For optimum performance, the storage subsystem must be able to provide data at the tape drive's maximum transfer rate.

Backup systems using a lower speed Ethernet network should use multiple network connections.

6.4.4 Backup/Archive Server

The backup server must have enough RAM and processor power to transfer the files from the disk to the tape drive, in addition to running the backup or archive software and any other processes.

Check the RAM and processor usage during a backup operation. If they are operating at capacity, adding RAM or processor capability can improve performance.

6.4.5 Backup/Archive Software and Method

Each backup method has its own impact on performance, depending on how well it can keep data streaming to the tape drive. In most cases, native applications don't have the features required to maximize performance for LTO tape drives. Qualstar recommends using a full-featured backup or archive application with this library.

File-by-file backup or archive methods provide the best restore performance if you only need to restore individual files. However, if the average file size is small, file-by-file methods will significantly reduce performance.

Disk image, flash, or sequential backup methods provide the fastest performance because they back up an entire disk, partition, or LUN, which minimizes disk seeking. The disadvantage is that backup and restore operations work on an entire disk, partition, or LUN. You might not be able to back up a subset of files or restore a single file. If you can restore a single file, the restore process will be slow.

Database backup performance will vary based on the use model. To improve performance when backing up data from a database:

- Use specific backup agents for the database.
- Use the latest versions of the databases.
- Do not back up individual mailboxes.
- Do not back up specific records or do a record-by-record backup.
- Do not back up when the database is in heavy use.

6.4.6 Connection from the Archive/Backup Host Server to the Library

For the best performance, the connection from the host server to the library must have enough bandwidth to provide enough data to keep the tape drive streaming. Current LTO tape drives take advantage of some of the fastest interfaces available so the type of interface used to connect the library to the host server is not likely to be the cause of a performance issue. However, issues with cables and connectors can limit performance.

Do not exceed recommended cable lengths.

6.4.7 Media

The type and condition of the media also affect backup performance. For best performance, use media that is the same LTO generation as the tape drives.

© Copyright QUALSTAR 2016

6.5 Finding Event Information

You can find error codes by viewing log files from the **Maintenance > Logs and Traces > View Logs** screen or downloading support tickets from the **Maintenance > Download Support Ticket** screen. See "**Viewing Log Files**" or "**Downloading Support Tickets**".

6.6 Unlocking the Magazine

It is recommended that you unlock the magazine using the OCP or RMI. If these methods fail, or if a magazine needs to be removed when the power to the device is off, you can release the magazine manually. Only one magazine or mailslot can be open at a time.

NOTE As a best practice, perform this procedure while applications are idle. While the magazine is extended, the library robotic assembly cannot move media

6.6.1 Using the OCP

1. Log in as an administrator.
2. On the Home screen, tap **Open Magazine**.

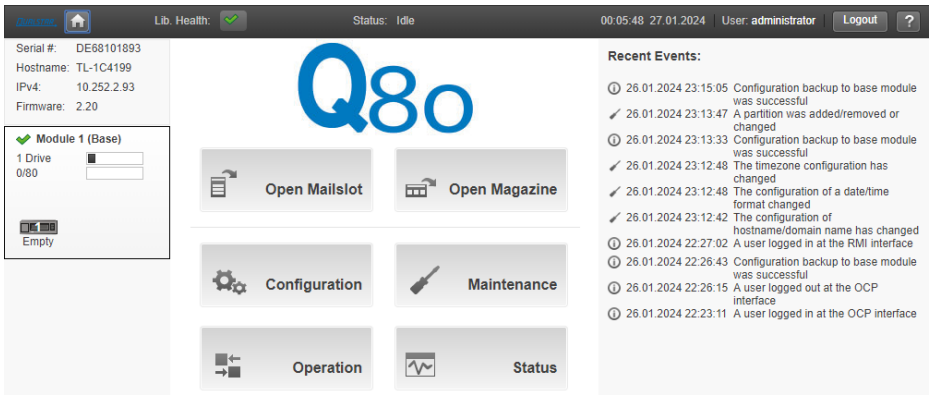

3. Tap **Open** in the left or right magazine column within the module containing the magazine to be replaced.

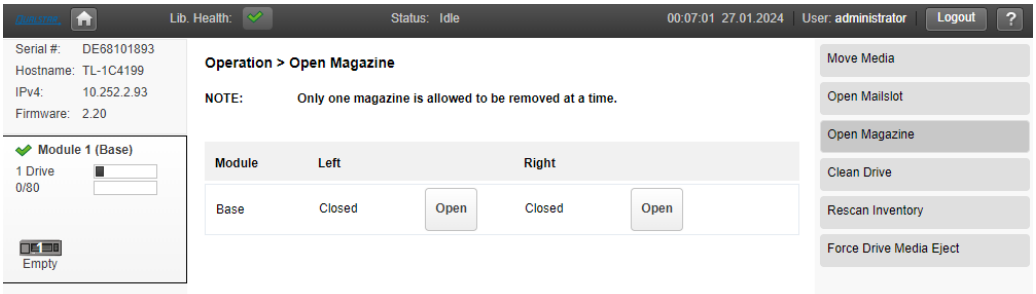

4. A message box indicates when the magazine has been unlocked.
5. Open Magazine screen shows that the magazine is now unlocked.

NOTE If not removed, the magazines and the mailslot will relock after 30 seconds.

6.6.2 Using the RMI

1. Log in as an administrator.
2. On the Home screen, click **Open Magazine**.

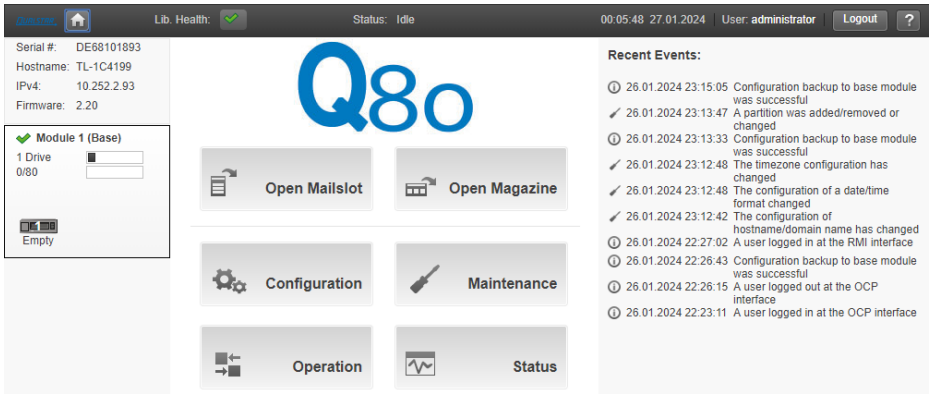

3. Click **Open** in the left or right magazine column within the module containing the magazine to be replaced.

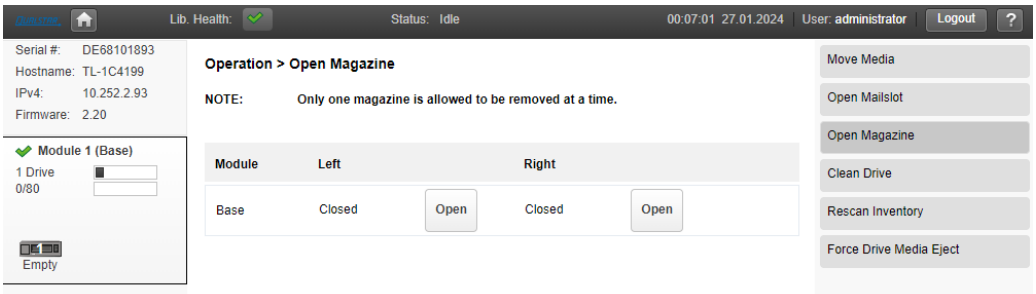

4. A message box indicates when the magazine has been unlocked.
5. Open Magazine screen shows that the magazine is now unlocked.

NOTE If not removed, the magazines and the mailslot will relock after 30 seconds.

6.6.3 Using the Manual Release

1. Open the magazine access door.
2. Insert a small flat head screwdriver or Torx driver into the appropriate magazine release hole and gently push the tab in.

! **IMPORTANT** Do not exert force once you encounter resistance. Doing so can damage the device.

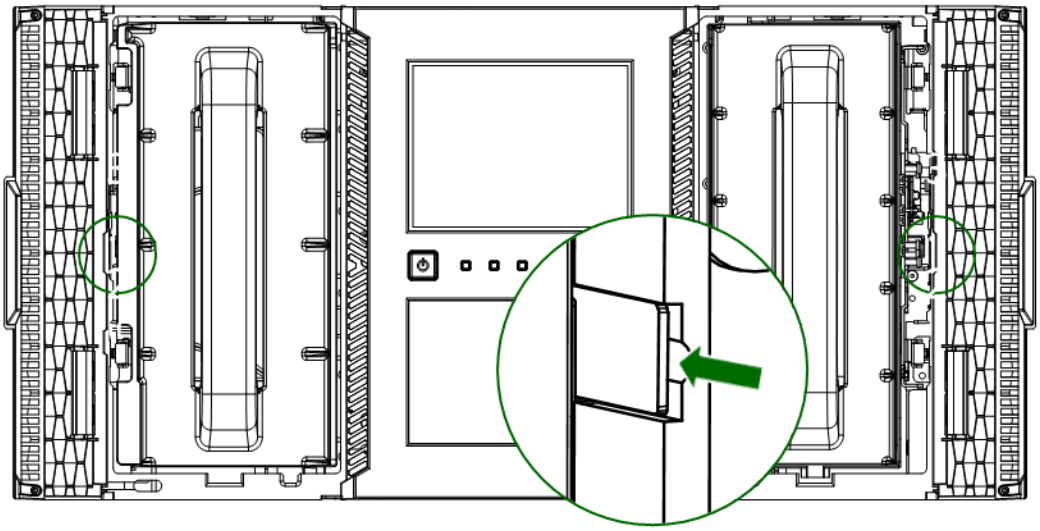

6.7 Unloading a Stuck Tape

If the tape is stuck in a tape drive, eject the tape from the drive from the **Operation > Force Drive Media Eject** screen.

If a tape is stuck in a magazine, open the magazine, grasp the cartridge, and pull it out of the storage slot.

6.8 Identifying a Failed Component

Using the OCP or RMI:

1. Activate the UID LEDs from the **Maintenance > UID LED Control** screen. This will illuminate the blue LED on the front and rear of the base module to identify the library containing the failed module or component.
2. Identify the module within the library that contains the failed component:
   a. In the upper left of the Home screen, locate the module that indicates an error.
   b. Click or tap the module for information on the failed component.

6.9 Returning the Robotic Assembly to the Base Module

If you have powered off the library and the robotic assembly did not return to its park position in the base module behind the OCP:

1. Power on the library by pressing the power button on the base module just below the OCP.
2. From the RMI, return the robotic assembly to its park position from the **Maintenance > Move Robotic to Base Module** screen.
3. Power off the library by pressing the power button on the base module and holding for 3 seconds.

If the robotic assembly is still not in the base module, use one of the procedures in the following two sections.

6.9.1 The Robotic Assembly is stopped in an Expansion Module that is near the Base Module or is Stopped Directly between Two Modules

1. Remove the front bezel from the base module, the expansion module containing the robotic assembly, and modules in between as needed; see **"Removing the Bezel"**.
2. Insert a small flat head screwdriver into the screwdriver relief on the right rear bearing block of the robotic assembly.

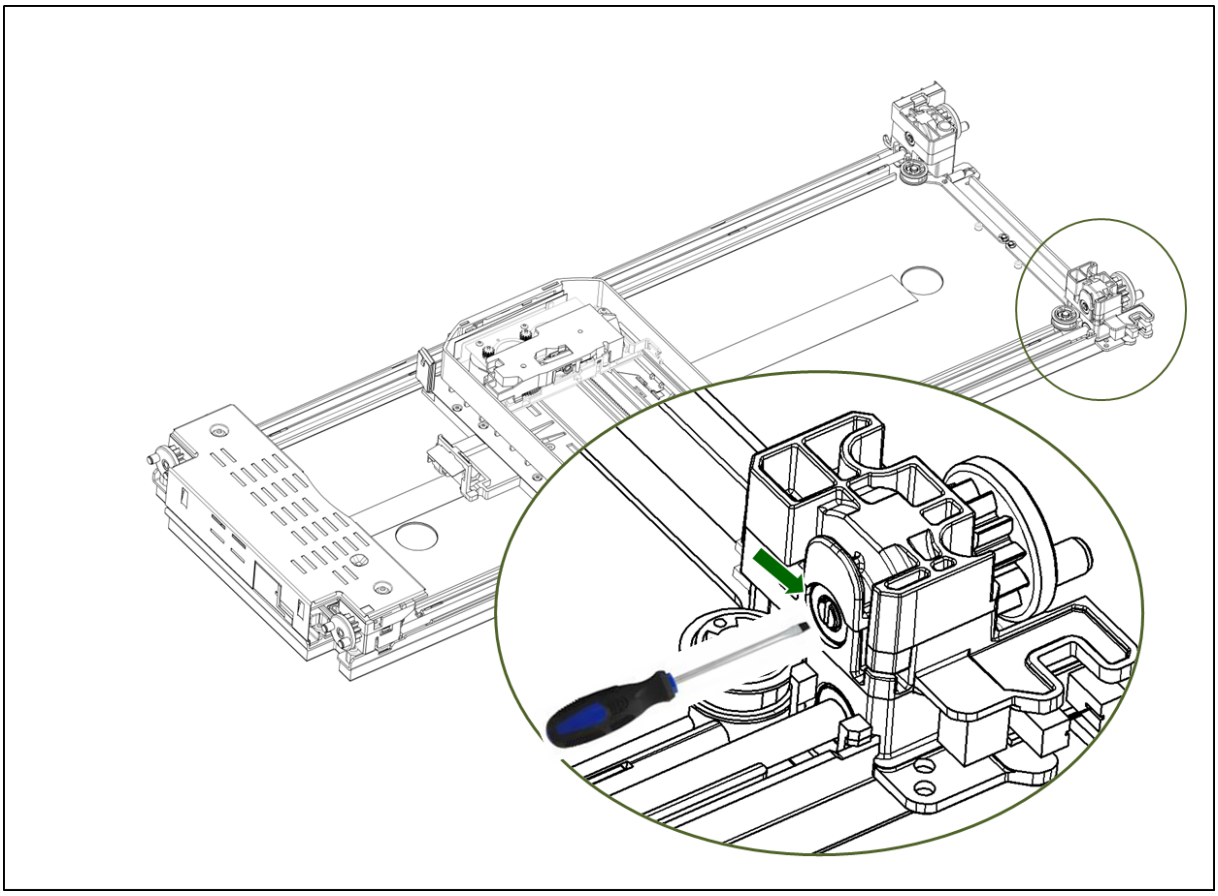

3. Turn the screwdriver to manually operate the robotic assembly gear train and move the robotic assembly into the base module.

4. Lock the robotic assembly; standing at the front of the module, move the blue lever to the left, then away from you, then to the right.
5. Reinstall the bezels previously removed; see **"Installing the Bezel"**.
6. Remove the robotic assembly and spooling mechanism; see **"Preparing to Remove the Robotic Assembly and Spooling Mechanism from the Base Module"**.
7. Install the new robotic assembly and spooling mechanism; see **"Installing the Robotic Assembly and Spooling Mechanism into the Base Module".**
8. Slide the base module back into the rack; see **"After the Robotic Assembly and Spooling Mechanism Installation"**.

6.9.2 The Robotic Assembly is stopped in an Expansion Module that is not near the Base Module or it Cannot Move Vertically

1. Remove the left magazine of the base module; see **"Removing the Magazine"**. The library should already be powered off. Therefore, you must unlock the magazine using the manual release.
2. Disconnect the power supply cables from all of the modules
3. Using plastic-handled scissors reach through the left magazine opening of the base module and carefully cut the spooling cable.

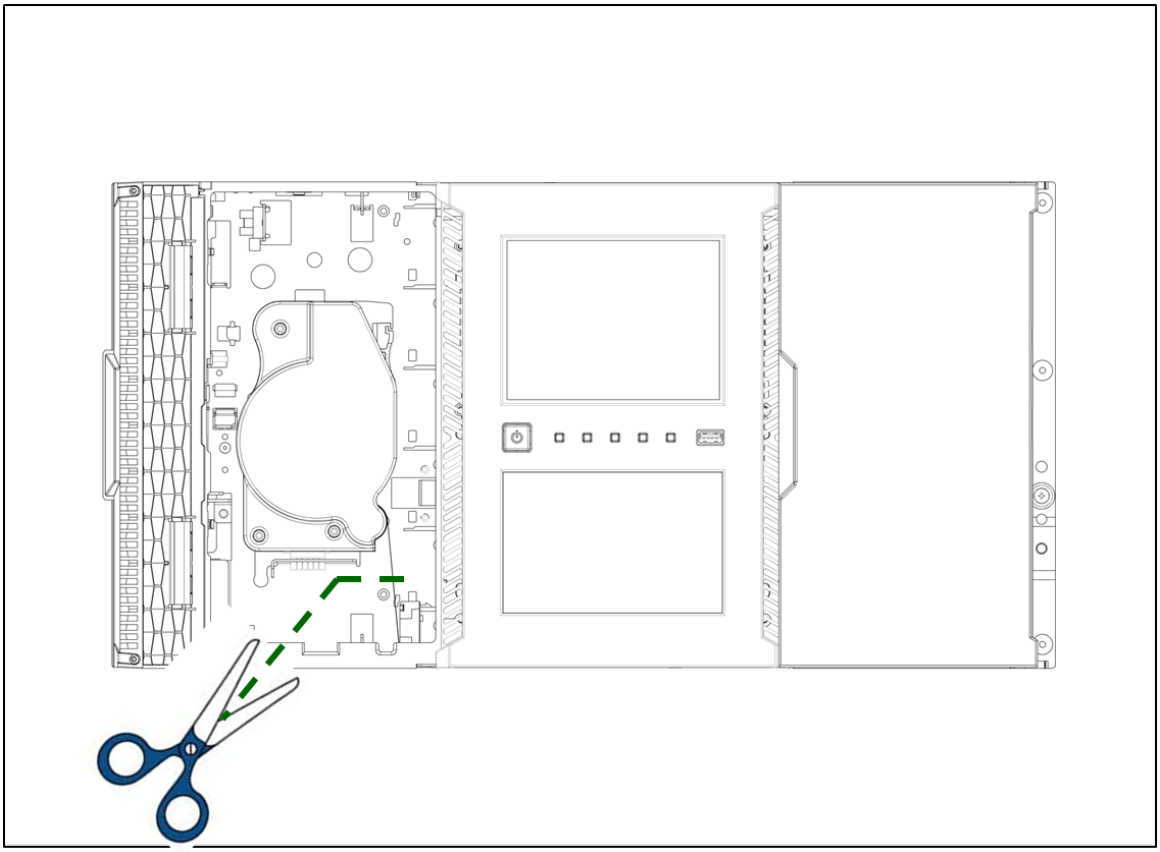

4. Extend the expansion module containing the robotic assembly while carefully guiding the free spooling cable; see **"Preparing to Remove the Robotic Assembly and Spooling Mechanism**

from the Base Module". While there may be minor differences, these instructions for a base module will also apply to an expansion module.

5. Remove the robotic assembly from the expansion module using Step 1 through Step 7 in **"Removing the Robotic Assembly and Spooling Mechanism from the Base Module"**.
6. Slide the expansion module back into the rack; see **"After the Robotic Assembly and Spooling Mechanism Installation"**. While there may be minor differences, these instructions for a base module will also apply to an expansion module.
7. Extend the base module; see **"Preparing to Remove the Robotic Assembly and Spooling Mechanism from the Base Module"**.
8. Remove the spooling mechanism from the base module using Step 8 through Step 10 in **"Removing the Robotic Assembly and Spooling Mechanism from the Base Module"**.
9. Install the new robotic assembly and spooling mechanism; see **"Installing the Robotic Assembly and Spooling Mechanism into the Base Module"**.
10. Slide the base module back into the rack; see **"After the Robotic Assembly and Spooling Mechanism Installation"**.

6.10 Running Library Tests

The library provides tests to verify library operations.

- Wellness Test –
- System Test –exercises overall library functionality by moving cartridges within the library. Cartridges are returned to their original location. See "**System Test"**. Section 4.7.1
- Slot to Slot Test – randomly exchanges cartridges within the library. Cartridges are NOT returned to their original locations. See **"Slot to Slot Test"**. Section 4.7.2
- Element to Element Test – moves a cartridge to a specific element and then returns it to its original location. See **"Element to Element Test"**. Section 4.7.3
- Robotics Test – performs a full inventory and exercises all robotic assembly movements and sensors. See **"Robotics Test"**. Section 4.7.4
- OCP LED Test – illuminates each of the front panel LEDs. See **"OCP Test and Calibration"**. Section 4.7.5

7 Acronyms and Abbreviations

FC	Fibre Channel
FH	Full Height
HBA	Host Bus Adapter
HH	Half Height
LUN	Logical Unit Number
OCP	Operator Control Panel
RMI	Remote Management Interface
SAN	Storage Area Network
SAS	Serial Attached SCSI
SNMP	Simple Network Management Protocol
SSH	Secure Shell
SSL	Secure Socket Layer
UID	Unit Identification
USB	Universal Serial Bus
WORM	Write Once, Read Many
WWPN	World-Wide Port Name

© Copyright QUALSTAR 2016

8 Event Codes

Table 18: Error Events

Event Code	Message Text and Description	Details and Solution
2000	Failed to move cartridge.	Verify the source and destination elements and retry the move operation.
2001	Failed to exchange the cartridge.	
2002	The initial module discovery (detection of expansion modules) failed.	Verify that all expansion modules are powered on and that the expansion interconnect cables are properly installed.
2003	The library's temperature has exceeded the critical limit.	1. Verify that the chassis fan in each module is functioning 2. Verify that the drive cover plates are installed in all open drive bays. 3. Verify that all power supplies are installed and working properly. 4. Verify that the ambient room temperature is within specified limits.
2004	Library startup failed.	1. If the robotic assembly fails to move through a certain area of the library: • Look through the window in the front panel and see if there are any obstructions. • Verify that both magazines in that module can be extended. 2. Verify that all modules have power and that any expansion modules are cabled correctly with the expansion interconnect cables. 3. Verify that the top and bottom cover plates are properly installed on the library. 4. Verify that the module alignment mechanisms at the rear of the library are locked in the proper positions. 5. Reboot the library. 6. If the robotic assembly moves front to back, but not vertically, the robot shipping lock could be positioned incorrectly and should be moved to either the fully locked or fully unlocked position. If the robotic assembly doesn't unlock the shipping lock after reboot: a. Move the robotic assembly to the base from the **Maintenance > Move Robotic to Base Module** screen. See **"Moving the Robotic Assembly to the Base Module"**. b. Power off the library. c. Remove all cables from the base module and

Event Code	Message Text and Description	Details and Solution
		unlock the alignment mechanism. d. Extend the base module from the rack. e. Reposition the lock. 7. If the error persists, review library events for additional information.
2005	Robotic spooling cable failure.	Ensure that the spooling cable is fully seated in the base module and correctly connected to the robotic assembly.
2006	Cable to spooling mechanism has failed.	
2007	Move command failed due to spooling mechanism failure.	
2008	Exchange cartridge failed due to spooling mechanism failure.	
2009	Library test failed due to robotics assembly problem.	Review the test requirements and retry the test. If the test continues to fail, check for robotic obstructions or other robotic problems.
2010	Library test failed due to spooling mechanism defect.	Ensure that the spooling mechanism is fully seated in the base module and installed correctly with the robotic assembly.
2011	Drive power board has failed. Some drives might be powered off.	1. Ensure that the drive power boards are fully seated in the module. 2. Power cycle the library.
2012	Multiple bottom covers detected.	Remove all bottom covers except for the bottom module in the library.
2013	Multiple top covers detected.	Remove all top covers except for the top module in the library.
2014	Bottom cover missing.	If the base module cannot detect both a top and a bottom cover, the robotic mechanism will not move. 1. Install the bottom cover on the bottom module in library. 2. Check the module interconnect cabling and module power cords.
2015	Top cover missing.	If the base module cannot detect both a top and a bottom cover, the robotic mechanism will not move. 1. Install the top cover on the bottom module in library. 2. Check the module interconnect cabling and module power cords.
2016	Module alignment mechanism is not locked properly.	Ensure that the alignment mechanisms for all modules above the bottom module are engaged and locked.

Event Code	Message Text and Description	Details and Solution
2017	A communication problem between modules was detected.	1. Ensure that all modules are powered on. 2. Ensure that all module interconnect cables are properly attached. 3. Ensure that the alignment mechanisms for all modules above the bottom module are engaged and locked.
2018	Too many unit position transmitter or detector failures.	1. Ensure that the alignment mechanisms for all modules above the bottom module are engaged and locked. 2. Power cycle the library.
2021	Database access error.	1. Reboot the library. 2. If the error persists, restore the library configuration. See **"Saving, Storing and Resetting the Library Configuration"**.
2022	Drive has been hot removed while in active status as LUN master. Tape drives must be powered off before removing them from the library.	Reinsert the removed drive in the same position from which it was removed.
2023	Internal software error.	Reboot the library.
2024	Exception thrown by application not handled.	An unrecoverable error occurred. Retry the operation and if the error persists reboot the library.
2025	Move failure due to vertical robotic positioning problem.	1. Check for obstructions, such as a cartridge sticking out, in the vertical pathway of the robotics assembly. 2. Verify that the robotic assembly is aligned and level within the library. 3. Verify that the rack is level front to back and side to side.
2026	Failed moving the robot towards the back or front of the library.	Check for obstructions, such as a cartridge sticking out or cable impeding progress, in the horizontal pathway of the robotics assembly.
2027	Move failed pulling cartridge from element.	Check for labels or cartridge misalignments that would prevent the cartridge from coming out of the slot or drive.
2028	Move failed inserting cartridge to element.	Check for labels or cartridge misalignments that would prevent the cartridge from being inserted into the slot or drive.
2029	Initialization failure due to robot front to back positioning.	1. Check for obstructions, such as a cartridge sticking out, in the vertical pathway of the robotics assembly. 2. Ensure that the alignment mechanisms for all modules above the bottom module are engaged and locked.

© Copyright QUALSTAR 2016

Event Code	Message Text and Description	Details and Solution
		3. Verify that the rack is level front to back and side to side. 4. Check to see if the robotic assembly is stuck in its locking mechanism. If so, move the robotics assembly out of the locking mechanism and then enable the locking mechanism properly.
2030	Failed during front to back movement.	Check for obstructions, such as a cartridge sticking out or cable impeding progress, in the horizontal pathway of the robotics assembly.
2031	Move failure due to right to left or left to right robot rotation failure.	
2032	Initialization failure due to robot gripper positioning error.	Check for obstructions, such as a cartridge sticking out, in the vertical pathway of the robotics assembly.
2033	Initialization failure due to robot vertical positioning error.	
2034	Cable to spooling mechanism has failed during initialization.	Ensure that the spooling mechanism is fully seated in the base module and installed correctly with the robotics assembly.

Table 19: Warning Events

Event Code	Message Text and Description	Details and Solution
4000	A reported drive canister fan speed is too slow.	Ensure that there are no obstructions to the drive fans.
4001	There is a Fibre Channel Loop ID conflict.	Change the FC to fabric or use a different loop setting.
4002	A drive sent a clean request.	Clean the drive with an approved cleaning cartridge.
4003	The drive configuration failed.	1. Remove the drive from the library, reinsert it and then retry the operation. 2. If the drive installed is a different LTO generation than the drive previously installed, reset the library defaults and then reconfigure the drive. 3. Use the RMI to pull a drive support ticket and check the device analysis section for more information.
4004	The drive status request failed.	1. Remove the drive from the library, reinsert it and then retry the operation. 2. If the problem persists, reset the drive. 3. Use the RMI to pull a drive support ticket and check the device analysis section for more information.

© Copyright QUALSTAR 2016

Event Code	Message Text and Description	Details and Solution
4005	Drive is reporting a critical TapeAlert.	1. Power cycle the drive and then verify whether the drive reports the same TapeAlert. 2. Use the RMI to pull a drive support ticket and check the device analysis section for more information.
4006	A drive temperature reported is above the threshold.	1. Verify that the drive fan is spinning and not obstructed. 2. Verify that the ambient temperature is within specification.
4007	Cartridge error.	1. Remove the cartridge and inspect it for damage. 2. Retry the operation with another cartridge.
4008	Cleaning tape expired.	Discard the cleaning cartridge and retry the cleaning operation with a new cleaning cartridge.
4009	Firmware upgrade of one or multiple expansion modules failed.	The base module must be able to communicate with a powered on and connected expansion module to perform the upgrade. 1. Reseat the expansion module controller. 2. Check the module interconnect cable and power connections. 3. Retry the firmware upgrade.
4010	Drive is not compatible with this library.	Remove the incompatible drive. Only install drives that are supported by the library.
4011	Drive is not supported in this library.	
4012	Move cartridge operation filed due to drive issue.	1. Check events occurring at the same time for drive problems. 2. Retry the operation with the same source and destination. If the problem persists, retry the operation with a different cartridge in the same drive 3. Use the RMI to pull a drive support ticket and check the device analysis section for more information.
4013	Exchange cartridge failed due to a drive issue.	1. Retry the operation with the same source and destination. If the problem persists, retry the operation with a different cartridge in the same drive. 2. Check the library event log for events associated with this drive. 3. Use the RMI to pull a drive support ticket and check the device analysis section for more information.

Event Code	Message Text and Description	Details and Solution
4014	Library test failed due to a drive issue.	1. Verify the test parameters and then retry the test. 2. Check the library event log for events associated with this drive. 3. Use the RMI to pull a drive support ticket and check the device analysis section for more information.
4015	Power supply has failed. Redundancy is not available.	1. Verify that each module has two power supplies installed. 2. Ensure that all power supplies are installed properly. 3. Verify that all power sources are supplying power that is within the product requirements.
4016	Backup configuration data to base module failed.	1. If possible, save the library configuration to a file. 2. Power cycle the library and retry the operation.
4017	Restore configuration data from chassis failed.	
4018	Firmware upgrade of one or more drives failed due to drive issue.	1. Verify that the firmware file is correct for the drive. 2. Ensure that the drive is in a healthy state and does not have a cartridge. 3. Retry the operation.
4019	General drive firmware bundle upgrade failure.	
4020	Database has been reset due to a problem that prevented the library from powering up.	Restore previously saved configuration data.
4021	Drive has been hot removed while in active status as data transfer device. Drives must be powered off before removing them from the library.	Reinsert the removed drive in the same position from which it was removed.
4023	Drive not cable (ports not linked up).	The tape drive must have an FC or SAS cable attached to transfer data and communicate with host applications.
4025	Library test failed due to a cartridge error.	1. Remove the cartridge and inspect it for damage. 2. Retry the operation with another cartridge.

© Copyright QUALSTAR 2016

Table 20: Configuration Change Events

Event Code	Message Text and Description
8000	The configuration of a drive changed.
8001	The drive was added or removed from the system.
8002	A partition was added/removed or changed.
8003	A mailslot bank was enabled/disabled.
8004	Drive firmware changed due to firmware upgrade.
8005	The configuration of hostname/domain name has changed.
8006	The email configuration settings have been changed.
8007	The configuration of a date/time format changed.
8008	The system language setting changed.
8009	The timezone configuration has changed.
8011	The network settings have changed.
8012	All expansion module upgraded. The firmware for all expansion modules has been upgraded.
8013	The NTP time synchronization configuration has changed.
8014	The SSH access was enabled/disabled.
8015	Level of media generation checking has changed.

Table 21: Informational Events

Event Code	Message
9000	A tape alert flag was reported by a drive.
9001	A drive is present in the system but powered off.
9002	The library was powered on.
9003	A move media command was executed.
9004	Inventory scan was performed.
9005	The library was powered down from the front panel.
9006	The network interface was switched on.
9007	The network interface switched off.
9008	The system time was synchronized with an SNTP server.
9009	A magazine was unlocked and opened.
9010	A magazine was closed and locked.
Event Code	**Message**
9011	A mailslot bank was unlocked and opened.

9012	A mailslot bank was closed and locked.
9013	A user logged in at the RMI interface.
9014	A user logged out at the RMI interface.
9015	A user logged in at the OCP interface.
9016	A user logged out at the OCP interface.
9017	MSL Encryption Kit password has changed.
9018	MSL Encryption Kit password has been requested.
9019	MSL Encryption Kit password has been created.
9020	MSL Encryption Kit password has been set.
9021	MSL Encryption Kit key has been generated.
9022	MSL Encryption Kit backup has been done.
9023	MSL Encryption Kit restore has been done.
9024	Drive support ticket created.
9025	Library test started.
9026	Library test successfully finished.
9027	Library test stopped by user.
9028	Configuration backup to base module was successful.
9029	Configuration restore from base module was successful.
9030	An invalid MSL Encryption Token was inserted.

© Copyright QUALSTAR 2016

9 Technical specifications

Table 22: Physical specifications

Characteristic	Product alone	Packaged
Height	268 mm (10.55 inches)	615 mm (24.21 inches)
Width	475 mm (18.70 inches)	800 mm (31.50 inches)
Depth	892 mm (35.12 inches)	1200 mm (47.24 inches)
Weight	Base module: 41.0 Kg (90.4 Lbs) Expansion module: 36.5 Kg (80.5 Lbs)	Base module: 54.5 Kg (120.2 Lbs) Expansion module: 50.0 Kg (110.2 Lbs)

Each module is shipped on a wooden pallet. **Pallets** may be stacked three high.

Table 23: Environmental specifications

Characteristic	Specification
Temperature	
Operating	5° to 40° C (41° to 104° F)
Non-operating	-40° to 60° C (-104° to 140° F)
Recommended operating temperature	10° to 35° C (50° to 95° F)
Temperature shock immunity - maximum rate of change	10° C per hour (50° F per hour)
Miscellaneous	
Dust concentration	less than 200 microgram / cubic meter
Altitude	5000 meters (16,450 feet)
Humidity	
Operating	10% to 80% RH non-condensing
Non-operating	5% to 90% RH non-condensing

Table 24: Electrical specifications

Characteristic	Specification
Current	5.0 - 3.5 A
Voltage	100 - 240 V 50/60 Hz
Power	350W

© Copyright QUALSTAR 2016

Table 25: Regulatory specifications (CSA test conditions)

Characteristic	Tested condition or value
Equipment mobility	Stationary - rack mount
Connection to the mains	Pluggable - Type A
Operating condition	Continuous
Access location	Operator accessible
Over voltage category (OVC)	OVCII
Mains supply tolerance (%) or absolute mains supply values	-10%, +6%
Tested for IT power systems	No
IT testing, phase-phase voltage (V)	N/A
Class of equipment	Class I
Considered current rating (A)	20 A (branch circuit protection)
Pollution degree (PD)	PD 2
IP protection class	IPXO
Altitude during operation	Max 2000 meters (6561 feet)
Altitude of test laboratory	38 meters (124.7 feet)
Mass of equipment	Max 25 kg (55.1 Lbs)
Manufacturer's Declared Ambient	40°C (104°F)

NOTE The CSA test conditions might differ from the product specification limits.

10 Default and restore default settings

Table 26: Default settings

Parameter	Default setting	Reset to default?
Users and passwords		
Administrator login	User: administrator Password: null	No
User login	User: user Password: null	
Network configuration (ethO)		
DHCP	Enabled	
Host name	Blank	
IP address	(obtain from DHCP)	
Subnet mask	(obtain from DHCP)	
Default gateway	(obtain from DHCP)	
Network configuration		
IPv4	Enabled	No
DHCPv4	Enabled	No
IPv6	Disabled	No
Static V6	Disabled	No
Stateless V6	Disabled	No
DNS configuration	Blank	No
Network access services		
Primary network interface (ethO)	Enabled	
SSH	Enabled	
SSL	Disabled	
LDAP	Disabled	Disabled with configuration retained
Slots		
Mailslots	Disabled	Yes
Administrator password required for mailslot removal	Enabled	Yes
Reserved slots	0	Yes
Partitions	Disabled (no partitions)	All deleted leaving a single partition
Date and Time		

Parameter	Default setting	Reset to default?
NTP /SNTP setting	Disabled	Disabled with configuration retained
Date	Blank or existing	
Time	Blank or existing	
Time zone	GMT	
E-mail notifications (SMTP)	Disabled	Disabled with configuration retained
SNMP/SMI-S		
SNMP v1, v2	Disabled	Disabled with configuration retained
SCSI defaults		
Product name - marketing name	Qualstar Q80	
Library product ID - INQUIRY product ID string (Std Inquiry page)	MULTISTAK	
Library vendor ID - INQUIRY vendor ID string (Std Inquiry page)	BDT	
Library product ID - IN QUIRY product ID string (INQ page CCl	MULTISTAK	
Library vendor ID - INQUIRY vendor ID string (INQ page CCl	BDT	
SCSI element addressing	Starting element addresses **Values in decimal:** • Slot: 1001 • Picker: NA • Drives: 1 • I/E slots: 101 **Values in hex:** • Slot: Ox3E9 • Picker: NA • Drives: Ox1 • I/E slots: Ox65	Yes
Miscellaneous settings		
Return drive serial numbers to host	Enabled	
Return barcodes to host (RES SCSI data)	Enabled	
Barcode format and length returned to host	8 digits, left justified	Yes
Language settings	English	Yes
Auto unload (library controlled unload)	Enabled	
Log tracing	Continuous, all levels selected	Yes
Ignore barcode media ID	Disabled	Yes
All licensed features	Disabled	Disabled, configuration retained where possible

Parameter	Default setting	Reset to default?
Licenses	Not applicable	Not deleted
OCP		
Barcode format displayed on OCP	8 digits, left justified	Yes
OCP contrast		No
Screen saver		Yes
Drive defaults		
Drive speed and topology setting	Auto speed/Fabric	Yes
Drive hosting the library LUN	Drive 1 or the lowest numbered existing drive	Yes
Drive power	All drives powered on	Yes
Auto clean	Disabled	Yes
PLR for both drives and library	Disabled	Yes, Command View TL receiver IP cleared

Electrostatic discharge

To prevent damaging the system, be aware of the precautions you need to follow when setting up the system or handling parts. A discharge of static electricity from a finger or other conductor may damage system boards or other static-sensitive devices. This type of damage may reduce the life expectancy of the device.

Topics include:

- Preventing electrostatic damage
- Grounding methods

Preventing electrostatic damage

To prevent electrostatic damage, observe the following precautions:

Avoid hand contact by transporting and storing products in static-safe containers.

Keep electrostatic-sensitive parts in their containers until they arrive at static-free workstations.

Place parts on a grounded surface before removing them from their containers.

Avoid touching pins, leads, or circuitry.

Always be properly grounded when touching a static-sensitive component or assembly. See the next section.

Grounding methods

There are several methods for grounding. Use one or more of the following methods when handling or installing electrostatic-sensitive parts:

- Use a wrist strap connected by a ground cord to a grounded workstation or computer chassis. Wrist straps are flexible straps with a minimum of 1 megohm (± 10 percent) resistance in the ground cords. To provide proper ground, wear the strap snug against the skin.
- Use heel straps, toe straps, or boot straps at standing workstations. Wear the straps on both feet when standing on conductive floors or dissipating floor mats.
- Use conductive field service tools.
- Use a portable field service kit with a folding static-dissipating work mat.

If you do not have any of the suggested equipment for proper grounding, have an Qualstar authorized reseller install the part.

NOTE

For more information on static electricity, or assistance with product installation, contact your Qualstar authorized reseller.

11 Regulatory Information

NOTE

To comply with the following regulations and standards, the library must be properly installed in an office or industrial environment with shielded cables and adequate grounding of the SCSI bus and the input power.

11.1 Recycling and disposal

NOTE

Disposal of waste equipment by users in private household in the European Union and Norway.

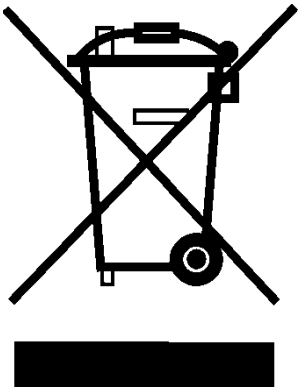

This symbol on the product or on its packaging indicates that this product must not be disposed of with your other household waste. Instead, it is your responsibility to dispose of your equipment by handling it over to a designated collection point for the recycling of waste electrical and electronic equipment. The separate collection and recycling of your waste equipment at this time of disposal will help to conserve natural resources and ensure that it is recycled in a manner that protects human health and the environment. For more information about where you can drop off your waste equipment for recycling, please contact your local city office, your household waste disposal service or the shop where you purchased the product.

Table 21: Device standards

11.2 CE mark

The CE mark is a mandatory conformity mark on many products placed on the single market in the European Economic Area (EEA). The CE marking certifies that a product has met EU consumer safety, health or environmental requirements.

11.3 CCL mark

CSA C22-2 No. 60950-1 – Electrical safety – UL 60950-1
68475

11.4 FCC (United States)

The computer equipment described in this manual generates and uses radio frequency (RF) energy. If the equipment is not installed and operated in strict accordance with the manufacturer's instructions, interference to radio and television reception might result.

Tested To Comply
With FCC Standards
For Home or Office Use

This equipment complies with Part 15 of the FCC Rules. Operation is subject to the following conditions: (1) This device may not cause harmful interference, and (2) this device must accept any interference received, including interference that may cause undesired operation.

Part 15, Class A, of the FCC Rules, is designed to provide reasonable protection against radio and television interference in a residential installation. Although the equipment has been tested and found to comply with the allowed RF emission limits, as specified in the above-cited Rules, there is no guarantee that interference will not occur in a particular installation. Interference can be determined by turning the equipment off and on while monitoring radio or television reception. The user may be able to eliminate any interference by implementing one or more of the following measures:

- Reorient the affected device and/or its receiving antenna.
- Increase the distance between the affected device and the computer equipment.
- Plug the computer and its peripherals into a different branch circuit from that used by the affected device.
- If necessary, consult an experienced radio/television technician for additional suggestions.

11.5 Canadian verification

This Class A digital apparatus meets all requirements of the Canadian Interference-Causing Equipment Regulations (ICES-003, Class A).